MECH FLOW SUPPLIES

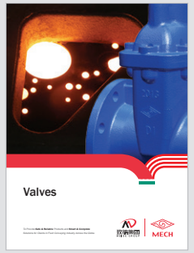

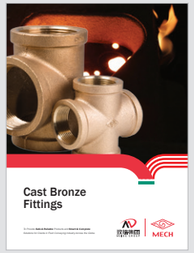

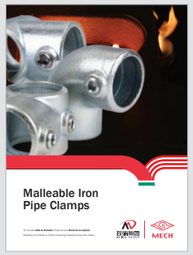

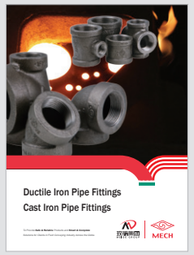

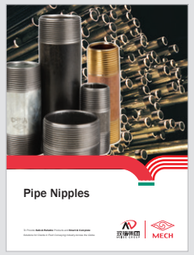

玫德集团 MEIDE GROUP | MECH

JINAN MEIDE CASTING CO., LTD.

Address: Meide Science & Technology Park,
Industrial Park Pingyin, Jinan, China 250400

Phone: (86)531 87856271 87879384 87885060

Fax: (86)531 87879387

Email: info@meide-casting.com

Http: //www.meide-casting.com

UPDATED 08/2019

Valves For Fire Protection

American Standard

*To Provide **Safe & Reliable** Products and **Smart & Complete** Solutions for Clients in Fluid Conveying Industry Across the Globe.*

玫德集团 MEIDE GROUP | MECH

More than 50 years of Foundry Experience

Company Profile

Meide Group is a high-tech enterprise specialized in supplying fittings and valves in fluid industry. The company has won more than 400 great honors, such as Single Champion Demonstration Enterprise, Green Manufacturing Enterprise, China's top 100 Light Industrial Enterprise, China's Leading Enterprise of Malleable Iron Pipe Fitting Production Base, National Enterprise with Good Creditworthiness and China's Famous Brand.

Inheriting the originality, and striving for excellence. "MECH" brand products are widely used in Burj Khalifa, dubai, new WTC in New York, Shanghai Tower, UHV transmission lines and other landmark buildings and projects such as Beijing-Shanghai high-speed railway. Adhering to the customer-centered product development and innovation concept, to meet and guide the growing needs of users, to provide safe & reliable products and smart & complete solutions for clients in fluid industry across the globe, Meide Group has become the industry leader.

Using development innovation platform such as National Enterprise Technical Center and Post-Doctoral Research Center, Meide Group is promoting the transformation of technology innovation achievements into productive forces, has completed the transformation of production process from mechanization to automation and intelligence, management from experience to institutionalization and process, marketing is from selling products to offering solutions, steadily improve Meide Group's role in the global value chain.

Through the construction of three production bases, including Jinan, Linyi and Bangkok, Meide Group has formed a cross-regional, multi-base international development pattern. Meide Group never forgets the original intention, operates in compliance, keeps growing, insists on sharing development results with customers, employees, shareholders and the community, and strive to be a happy and respectable company.

Company History

State of the Art Equipment

High precision equipment is quality assurance. Jinan Meide's 8 factories are all equipped with the most advanced facilities and equipment in the industry. The main production facilities include Sinto automatic molding line, Tokyu automatic molding line, Chinese 416 automatic vertical molding line, automatic molding sand mixers, cupola furnaces, electric furnaces, water-cooled longevous cupola furnaces, CNC vertical machining centers, CNC machines, NC vertical lathes, radial drills, Jinan Meide proprietary automatic machines, hot-dipped galvanization line, automatic box sealing line, stereoscopic warehouse and so on.

Pattern

Core Making

Sand Mulling

Melting

Sinto FCMX

DISA

Tokyu AMF-111055

Pouring

Machining

Epoxy Coating

Assembling

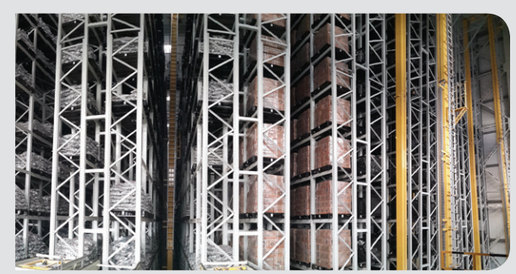

Warehouse

Reliable Quality Assurance

Jinan Meide is honored as the National enterprise technical center and is capable and qualified to conduct full series of tests and inspections including chemical checking, etc.

Inspection facilities include: spectrometer, carbon sulfur analyzer, metallurgical microscope, tensile strength testing equipment, pressure testing equipment, adhesive force testing equipment, CMM, hardness tester, etc.

From incoming inspection to finished product, quality is checked and monitored in the whole process. Each step of the manufacturing process is carefully documented, regularly reviewed for revision control and updating standard. Quality procedures are constantly monitored and updated to assure that only the highest and most consistent quality products are supplied to our valued customers.

Metallurgical Microscope

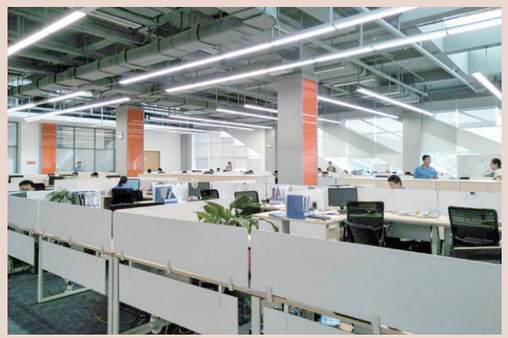

R & D

Spectrometer

CMM

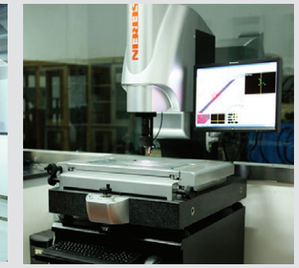

Projector

Pipe line

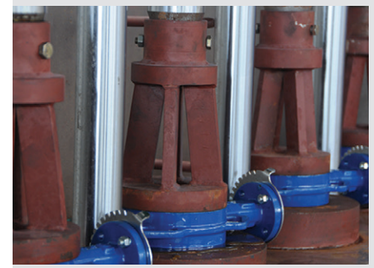

Valve Pressure Testing Machine (Vertical)

Endurance Test Machine

Valve Pressure Testing Machine (Horizontal)

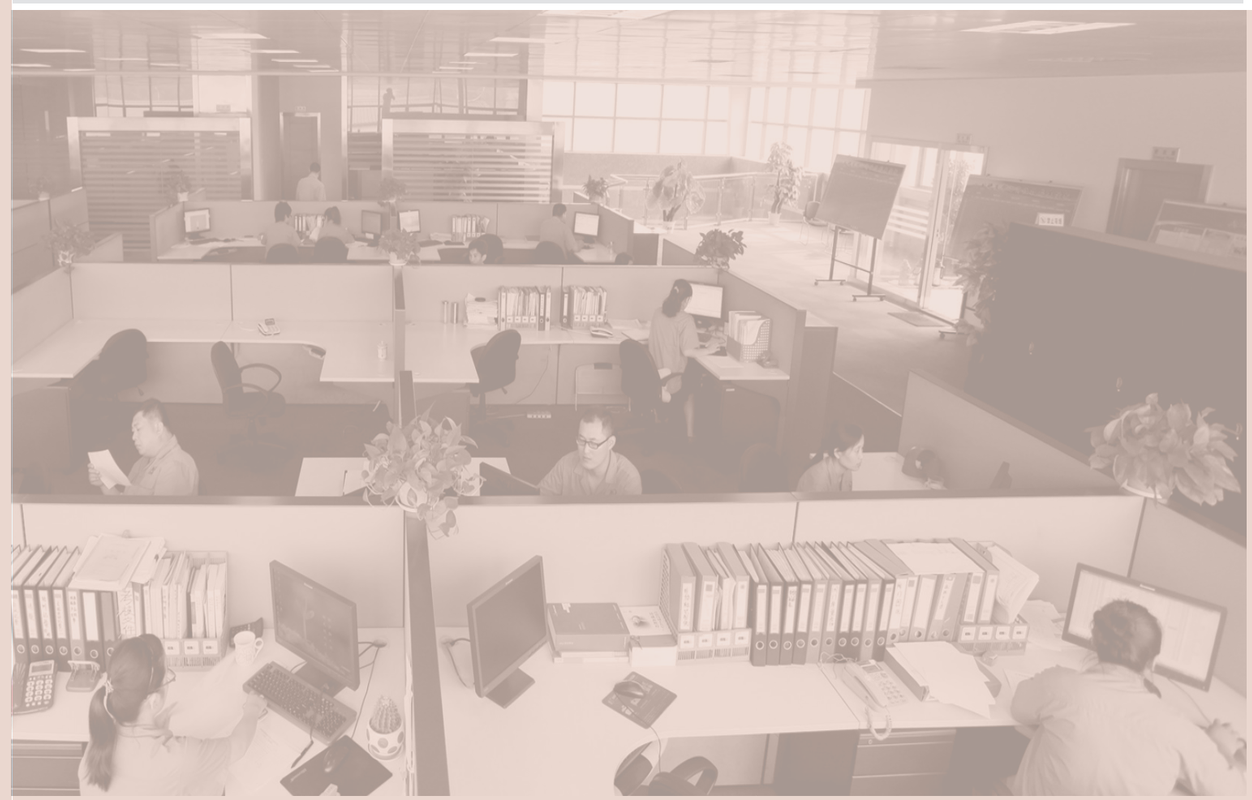

Certificates

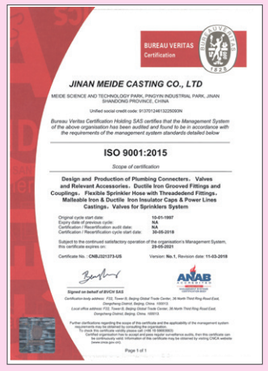

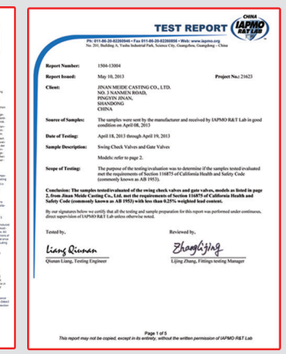

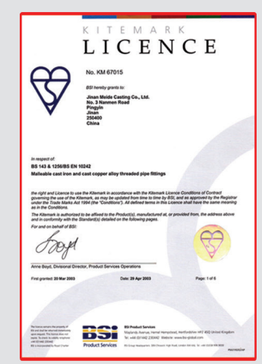

• **XZ81X**
Grooved Resilient OS&Y Gate Valve

• **XZ41X**
Flanged Resilient OS&Y Gate Valve

• **XZ51X**
Flanged x Grooved Resilient OS&Y Gate Valve

• **MXHQ**
Supervisory Switch for OS&Y Gate Valve

• **Z85X**
Grooved Resilient NRS Gate Valve

• **Z45XC**
Flanged Resilient NRS Gate Valve

• **Z45XC-2**
Flanged Resilient NRS Gate Valve with Post Flange

• **IP**
Vertical Indicator Post

• **WP**
Wall Indicator Post

• **ZXHQ**
Supervisory Switch for Indicator Post

• **XD381X**
Grooved Butterfly Valve with Tamper Switch

• **XD381XG**
Grooved Butterfly Valve with Normally Closed Tamper Switch

• **XD381XC**
Grooved Butterfly Valve with Tamper Switch

• **XD381X4-C**
Grooved Butterfly Valve with Tamper Switch

• **XD382X**
Double Eccentric Grooved Butterfly Valve with Tamper Switch

• **D81X4**
Grooved Butterfly Valve

• **XD371X**
Wafer Butterfly Valve with Tamper Switch

• **XD371XL**
Lugged Wafer Butterfly Valve with Tamper Switch

• **H84X**
Grooved Resilient Swing Check Valve

• **DH87X**
Double Door Grooved Check Valve

• **H44X2/ H44X2A**
Flanged Resilient Swing Check Valve

• **H44T2/H44T2A**
Flanged Resilient Swing Check Valve

• **DH77X**
Double Door Wafer Check Valve

• **HSB4X**
Backwater Valve

• **ARVX**
Micro Air Bleeding Valve

• **V8**
Grooved Y-Type Strainer

• **V4**
Flanged Y-Type Strainer

• **ZSFZ8X9**
Grooved Wet Alarm Check Valve

• **ZSFZ4X**
Flanged Wet Alarm Valve

• **SK790X**
Deluge Alarm Valve

• **ZSJZYS**
Water Flow Indicator with Retard

• **ZSJZ**
Water Flow Indicator

• **YLKG**
Pressure Switch

• **SSF**
Dry Barrel Fire Hydrant

• **SSZ**
Wet-Barrel Fire Hydrant

• **SN**
Indoor Fire Hydrant

• **XZ45W**
Dry Riser Landing Valve Flanged

• **XZ15W**
Dry Riser Landing Valve Threaded

• **XZ25W**
Dry Riser Landing Valve Threaded

• **ZSPM-80-DX**
Electric Inspector's Test Connection

• **ZSPM-80-SA**
Manual Inspector's Test Connection

Grooved Resilient OS&Y Gate Valve (XZ81X), UL/FM Approved

NSF/ANSI 61 NSF/ANSI 372
0C3073.7

XZ81X

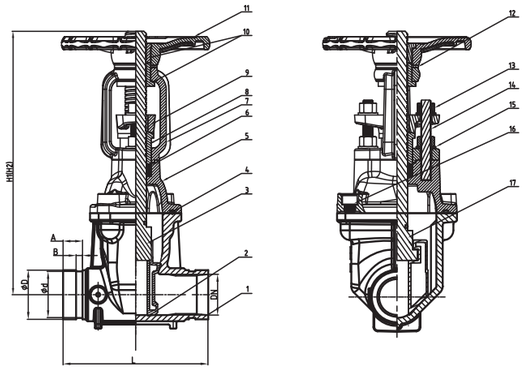

- Connection Ends: Groove to AWWA C606
- Working Pressure: 300PSI
  200PSI and 250PSI available upon request
- Temperature Range: 0℃- 100℃
- Coating: Fusion Bonded Epoxy Coating in accordance with ANSI/AWWA C550 or painting upon request

MATERIAL SPECIFICATION

Part No.	Part	Standard Specification	Options
1	Valve Body	ASTM A536, 65-45-12	
2	Resilient Wedge Disc	ASTM A536, 65-45-12+EPDM	
3	Stem	Stainless Steel	AISI 304, AISI 316, AISI 420, AISI 431
4	Bonnet Gasket	EPDM	NBR
5	Bonnet	ASTM A536, 65-45-12	
6	Washer	Brass HPb59-1	
7	Yoke	ASTM A536, 65-45-12	
8	Stem Bushing	Brass HPb59-1	
9	Gland	ASTM A536, 65-45-12	
10	Stem Nut	Brass HPb59-1	Bronze ZQSn5-5-5
11	Handwheel	ASTM A536, 65-45-12	Pressed Steel
12	Washer	Brass HPb59-1	
13	Gland Nut	Carbon Steel Zinc Plated	AISI 304, AISI 316
14	Stud	Carbon Steel Zinc Plated	AISI 304, AISI 316
15	Flat Washer	Carbon Steel Zinc Plated	AISI 304, AISI 316
16	Nut	Carbon Steel Zinc Plated	AISI 304, AISI 316
17	O-Ring	NBR	EPDM

Note: For special material request other than standard specification, please indicate clearly on the inquiry or order list.
Size 2"~3" with 1pc of 3/8" bronze NPT tapping plug, size 4"~5" with 1pc of 1/2" bronze NPT tapping plug, size 6"~12 with 1pc of 3/4" bronze NPT tapping plug.

DN		Dimensions(mm)						
Inch	mm	L	H1(Close)	H2(Open)	OD	d	A	B
2"	50	178	348	400	60.3	57.15	15.88	7.92
2.5"	65	190	373	440	73	69.09	15.88	7.92
3"	80	203	408	490	88.9	84.94	15.88	7.92
4"	100	229	471	573	114.3	110.08	15.88	9.52
5"	125	254	541	665	141.3	137.03	15.88	9.52
6"	150	267	601	755	168.3	163.96	15.88	9.52
8"	200	292	774	975	219.1	214.4	19.05	11.13
10"	250	330	1029	1283	273	268.28	19.05	12.7
12"	300	356	1065	1370	323.9	318.29	19.05	12.7

Flanged Resilient OS&Y Gate Valve (XZ41X), UL/FM Approved

NSF/ANSI 61 NSF/ANSI 372
0C3073.7

XZ41X

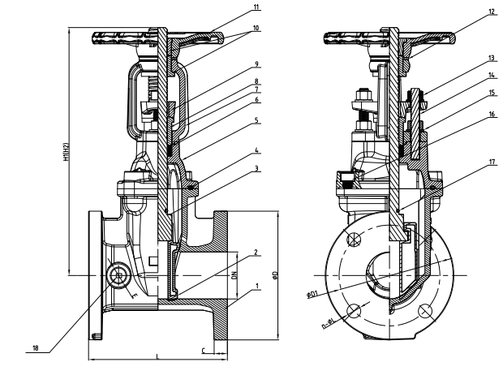

- Connection Ends: Flange to ASME B16.1 CL 125
- Working Pressure: 300PSI
  200PSI and 250PSI available upon request
- Temperature Range: 0℃- 100℃
- Coating: Fusion Bonded Epoxy Coating Complies with ANSI/ AWWA C550

XZ41X-1

MATERIAL SPECIFICATION

Part No.	Part	Standard Specification	Options
1	Valve Body	ASTM A536, 65-45-12	
2	Resilient Wedge Disc	ASTM A536, 65-45-12+EPDM	
3	Stem	AISI 420	AISI 304, AISI 316, AISI 431, Al-bronze
4	Bonnet Gasket	EPDM	NBR
5	Bonnet	ASTM A536, 65-45-12	
6	Packing	EPDM	
7	Yoke	ASTM A536, 65-45-12	
8	Stem Bushing	Brass Hpb59-1	
9	Gland	ASTM A536, 65-45-12	
10	Stem Nut	Brass Hpb59-1	Bronze ZQSn5-5-5
11	Handwheel	ASTM A536, 65-45-12	Pressed Steel
12	Washer	Brass Hpb59-1	
13	Gland Nut	Carbon Steel Zinc Plated	AISI 304, AISI 316
14	Stud	Carbon Steel Zinc Plated	AISI 304, AISI 316
15	Flat Washer	Carbon Steel Zinc Plated	AISI 304, AISI 316
16	Bolt	Carbon Steel Zinc Plated	AISI 304, AISI 316
17	O-Ring	NBR	EPDM
18	Plug	C89833	

Note: For special material request other than standard specification, please indicate clearly on the inquiry or order list.
Size 2"~5" with 1pc of 1/2" bronze NPT tapping plug, size 6"~12 with 1pc of 3/4" bronze NPT tapping plug.

DN		Dimensions(mm)						
Inch	mm	L	H1(Close)	H2(Open)	D	D1	C	n-ΦL
2"	50	178	348	400	152	120.7	16.0	4-Ø19.1
2.5"	65	190	373	440	178	139.7	17.5	4-Ø19.1
3"	80	203	408	490	191	152.4	19.1	4-Ø19.1
4"	100	229	471	573	229	190.5	19.1	8-Ø19.1
5"	125	254	541	665	254	215.9	19.1	8-Ø22.2
6"	150	267	601	755	279	241.3	19.1	8-Ø22.2
8"	200	292	774	975	343	298.5	22.2	8-Ø22.2
10"	250	330	939	1193	406	362.0	23.8	12-Ø25.4
12"	300	356	1065	1370	483	431.8	25.4	12-Ø25.4
14"	350	381	1403	1817	533	476.3	25.4	12-Ø28.6
16"	400	406	1403	1817	597	539.8	25.4	16-Ø28.6
18"	450	432	1788	2308	635	577.9	25.4	16-Ø31.8
20"	500	457	1809	2329	699	635	28.6	20-Ø31.8
24"	600	508	2025	2649	813	749.3	30.1	20-Ø34.9

Flanged x Grooved Resilient OS&Y Gate Valve (XZ51X), UL/FM Approved

NSF/ANSI 61 NSF/ANSI 372
0C3073.7

XZ51X

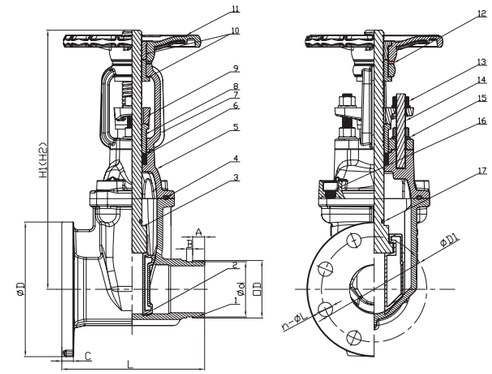

- Connection Ends: Flange to ASME B16.1 CL 125
  Groove to AWWA C606
- Working Pressure: 300PSI
  200PSI and 250PSI available upon request
- Temperature Range: 0℃- 100℃
- Coating: Fusion Bonded Epoxy Coating Complies with ANSI/AWWA C550

MATERIAL SPECIFICATION

Part No.	Part	Standard Specification	Options
1	Valve Body	ASTM A536, 65-45-12	
2	Resilient Wedge Disc	ASTM A536, 65-45-12+EPDM	
3	Stem	Stainless Steel	AISI 304, AISI 316, AISI 420, AISI 431
4	Bonnet Gasket	EPDM	
5	Bonnet	ASTM A536, 65-45-12	
6	Stem Packing	EPDM	
7	Yoke	ASTM A536, 65-45-12	
8	Stem Bushing	Brass Hpb59-1	
9	Gland	ASTM A536, 65-45-12	
10	Stem Nut	Brass Hpb59-1	Bronze ZQSn5-5-5
11	Handwheel	ASTM A536, 65-45-12	Pressed Steel
12	Washer	Brass Hpb59-1	
13	Gland Nut	Carbon Steel Zinc Plated	AISI 304, AISI 316
14	Stud	Carbon Steel Zinc Plated	AISI 304, AISI 316
15	Flat Washer	Carbon Steel Zinc Plated	AISI 304, AISI 316
16	Bolt	Carbon Steel Zinc Plated	AISI 304, AISI 316
17	O-Ring	NBR	EPDM

Note: For special material request other than standard specification, please indicate clearly on the inquiry or order list.
Size 2"~5" with 1pc of 1/2" bronze NPT tapping plug, size 6"~12 with 1pc of 3/4" bronze NPT tapping plug.

DN		Dimensions(mm)									
Inch	mm	L	H1(Close)	H2(Open)	D	D1	C	n-ΦL	OD	d	A
2"	50	178	348	400	152	120.7	16.0	4-Φ19.1	60.3	57.15	15.88
2.5"	65	190	373	440	178	139.7	17.5	4-Φ19.1	73.0	69.09	15.88
3"	80	203	408	490	191	152.4	19.1	4-Φ19.1	88.9	84.94	15.88
4"	100	229	471	573	229	190.5	19.1	8-Φ19.1	114.3	110.08	15.88
5"	125	254	541	665	254	215.9	19.1	8-Φ22.2	141.3	137.03	15.88
6"	150	267	601	755	279	241.3	19.1	8-Φ22.2	168.3	163.96	15.88
8"	200	292	774	975	343	298.5	22.2	8-Φ22.2	219.1	214.4	19.05
10"	250	330	1029	1283	406	362.0	23.8	12-Φ25.4	273.0	268.28	19.05
12"	300	356	1065	1370	483	431.8	25.4	12-Φ25.4	323.9	318.29	19.05

Supervisory Switch for OS&Y Gate Valve (MXHQ)

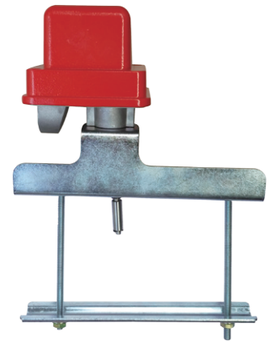

MXHQ

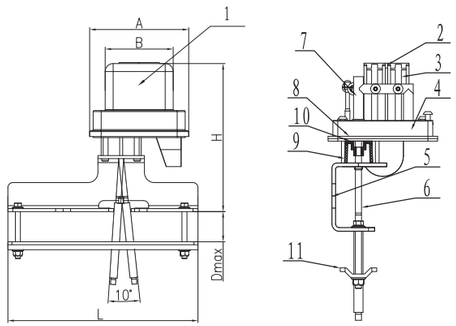

- Service Environment: Indoor or Outdoor use, all parts have corrosion resistant finishes
- Temperature Range: -10℃ - 80℃ (14° F- 176° F)
- Cover Tamper: Tamper Resistant Screws
  Optional Cover Tamper Switch Available
- Electrical Ratings: 15 Amps at 125/250VAC
- Appliance Standards: NFPA-13, NFPA-13D,
  NFPA-13R, NFPA-72
- Statement: The Model MXHQ Supervisory Switch is used to monitor the open or close status of an OS&Y (outside screw and yoke) type gate valve. There are two sizes, the model MXHQ D50 serves the OS&Y Gate valves ranging in size from 2"-16"(50mm - 400mm), the other model MXHQ D450 is fit for the OS&Y Gate valves ranging in size from 18"-24"(450mm - 600mm).

MATERIAL SPECIFICATION

Part No.	Part	Standard Specification	Options
1	Outer Shell	ADC12	
2	Brace	Carbon Steel Q235	AISI 304, AISI 316
3	Micro Switch		
4	Base	ADC12	
5	Connection Plate	Carbon Steel Q235	AISI 304, AISI 316
6	Driving Lever	AISI 304	AISI 316
7	Axis	Nylon	
8	Sealing Gasket	CR Foam Cotton	
9	Pressing Sleeve	PTFE	
10	Rubber Ring	EPDM	
11	Clamp Plate	Carbon Steel Q235	

Note: For special material request other than standard specification, please indicate clearly on the inquiry or order list.

DN		Dimensions(mm)				
Inch	mm	A	B	H	L	Dmax
2"-16"	50-400	99	68	148	200	105
18"-24"	450-600	99	68	148	360	135

TYPICAL ELECTRICAL CONNECTIONS

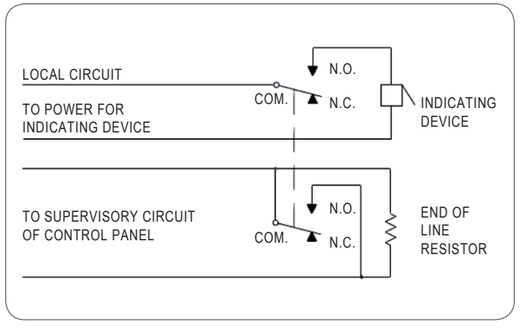

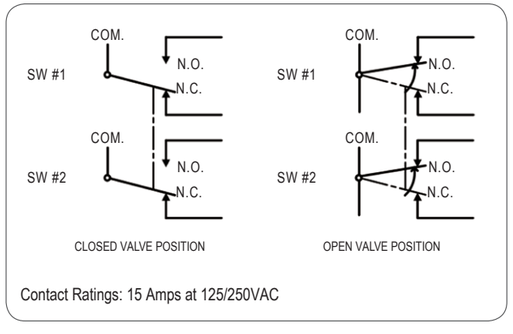

Contact Ratings: 15 Amps at 125/250VAC

Grooved Resilient NRS Gate Valve (Z85X), UL/FM Approved

NSF/ANSI 61 NSF/ANSI 372
0C3073.7

Z85X

c UL us LISTED FM APPROVED

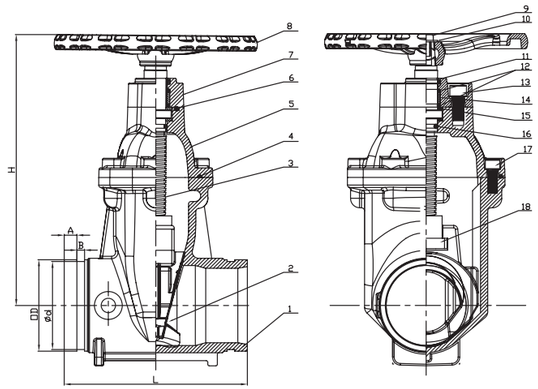

- Connection Ends: Groove to AWWA C606
- Working Pressure: 300PSI
  200PSI and 250PSI available upon request
- Temperature Range: 0℃- 100℃
- Coating: Fusion Bonded Epoxy Coating in accordance with ANSI/AWWA C550 or painting upon request

MATERIAL SPECIFICATION

Part No.	Part	Standard Specification	Options
1	Valve Body	ASTM A536, 65-45-12	
2	Resilient Wedge Disc	ASTM A536, 65-45-12+EPDM	
3	Stem	Stainless Steel	AISI 304, AISI 316, AISI 420, AISI 431
4	Bonnet Gasket	EPDM	NBR
5	Bonnet	ASTM A536,65-45-12	
6	O-Ring	NBR	EPDM
7	Gland	ASTM A536,65-45-12	
8	Handwheel	ASTM A536,65-45-12	Pressed Steel
9	Bolt	Carbon Steel Zinc Plated	AISI 304, AISI 316
10	Flat Washer	Carbon Steel Zinc Plated	AISI 304, AISI 316
11	Ring Wiper	EPDM	NBR
12	O-Ring	NBR	EPDM
13	Nut	Carbon Steel Zinc Plated	AISI 304, AISI 316
14	Axis Guide	Brass HPb59-1	
15	Washer	Brass HPb59-1	
16	O-Ring	NBR	EPDM
17	Nut	Carbon Steel Zinc Plated	AISI 304, AISI 316
18	Wedge Nut	Brass HPb59-1	Bronze ZQSn5-5-5

Note: For special material request other than standard specification, please indicate clearly on the inquiry or order list.
Size 2"~3" with 1pc of 3/8" bronze NPT tapping plug, size 4"~5" with 1pc of 1/2" bronze NPT tapping plug, size 6"~12 with 1pc of 3/4" bronze NPT tapping plug.

DN		Dimensions(mm)					
Inch	mm	L	H	OD	d	A	B
2"	50	178	254	60.3	57.15	15.88	7.92
2.5"	65	190	275	73	69.09	15.88	7.92
3"	80	203	301	88.9	84.94	15.88	7.92
4"	100	229	355	114.3	110.08	15.88	9.52
5"	125	254	393	141.3	137.03	15.88	9.52
6"	150	267	448	168.3	163.96	15.88	9.52
8"	200	292	548	219.1	214.4	19.05	11.13
10"	250	330	626	273	268.28	19.05	12.7
12"	300	356	722	323.9	318.29	19.05	12.7

Flanged Resilient NRS Gate Valve (Z45XC), UL/FM Approved

NSF/ANSI 61 NSF/ANSI 372
0C3073.7

Z45XC

c UL us LISTED FM APPROVED

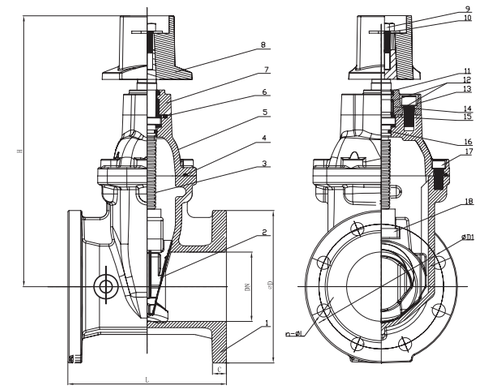

- Connection Ends: Flange to ASME B16.1 CL 125
- Working Pressure: 300PSI
  200PSI and 250PSI available upon request
- Temperature Range: 0℃- 100℃
- Coating: Fusion Bonded Epoxy Coating in accordance with ANSI/AWWA C550

0C3073.7

Z45X

0C3073.7

Z35X

0C3073.7

Z05X

0C3073.7

Z55X

MATERIAL SPECIFICATION

Part No.	Part	Standard Specification	Options
1	Valve Body	ASTM A536, 65-45-12	
2	Resilient Wedge Disc	ASTM A536, 65-45-12+EPDM	
3	Stem	Stainless Steel	AISI 304, AISI 316, AISI 420, AISI 431
4	Bonnet Gasket	EPDM	NBR
5	Bonnet	ASTM A536, 65-45-12	
6	O-Ring	NBR	EPDM
7	Gland	ASTM A536, 65-45-12	
8	Stem Cap	ASTM A536, 65-45-12	
9	Bolt	Carbon Steel Zinc Plated	AISI 304, AISI 316
10	Flat Washer	Carbon Steel Zinc Plated	AISI 304, AISI 316
11	Ring Wiper	EPDM	NBR
12	O-Ring	NBR	EPDM
13	Nut	Carbon Steel Zinc Plated	AISI 304, AISI 316
14	Axis Guide	Brass HPb59-1	
15	Washer	Brass HPb59-1	
16	O-Ring	NBR	EPDM
17	Nut	Carbon Steel Zinc Plated	AISI 304, AISI 316
18	Wedge Nut	Brass HPb59-1	Bronze ZQSn5-5-5

Note: For special material request other than standard specification, please indicate clearly on the inquiry or order list.
Size 2"~5" with 1pc of 1/2" bronze NPT tapping plug, size 6"~12 with 1pc of 3/4" bronze NPT tapping plug.

DN		Dimensions(mm)						
Inch	mm	L	H(Z45X)	H(Z45XC)	D	D1	C	n-ΦL
2"	50	178	254	278	152	120.7	16.0	4-Ø19.1
2.5"	65	190	275	300	178	139.7	17.5	4-Ø19.1
3"	80	203	301	321	191	152.4	19.1	4-Ø19.1
4"	100	229	355	375	229	190.5	19.1	8-Ø19.1
5"	125	254	393	415	254	215.9	19.1	8-Ø22.2
6"	150	267	448	455	279	241.3	19.1	8-Ø22.2
8"	200	292	548	565	343	298.5	22.2	8-Ø22.2
10"	250	330	626	636	406	362.0	23.8	12-Ø25.4
12"	300	356	722	731	483	431.8	25.4	12-Ø25.4
14"	350	381	918	928	533	476.3	25.4	12-Ø28.6
16"	400	406	918	928	597	539.8	25.4	16-Ø28.6
18"	450	432	1108	1165	635	577.9	25.4	16-Ø31.8
20"	500	457	1130	1188	699	635	28.6	20-Ø31.8
24"	600	508	1321	1364	813	749.3	30.1	20-Ø34.9

Flanged Resilient NRS Gate Valve with Post Flange (Z45XC-2), UL/FM Approved

NSF/ANSI 372
0C3073.7

Z45XC-2

• Connection Ends: Flange to ASME B16.1 CL 125

• Working Pressure: 300PSI
200PSI and 250PSI available upon request

• Temperature Range: 0℃- 100℃

• Coating: Fusion Bonded Epoxy Coating in accordance with ANSI/AWWA C550

Z35XC-2

0C3073.7

Z85XC-2

Z05XC-2

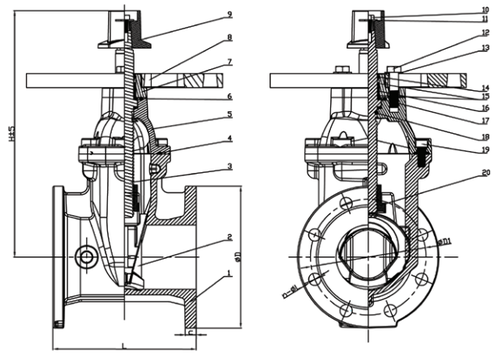

MATERIAL SPECIFICATION

Part No.	Part	Standard Specification	Options
1	Valve Body	ASTM A536, 65-45-12	
2	Resilient Wedge Disc	ASTM A536, 65-45-12+EPDM	
3	Stem	Stainless Steel	AISI 304, AISI 316, AISI 420, AISI 431
4	Bonnet Gasket	EPDM	NBR
5	Bonnet	ASTM A536, 65-45-12	
6	O-Ring	NBR	EPDM
7	Gland	ASTM A536, 65-45-12	
8	Post Flange	ASTM A536, 65-45-12	
9	Square Operating Nut	ASTM A536, 65-45-12	
10	Bolt	Carbon Steel Zinc Plated	AISI 304, AISI 316
11	Flat Washer	Carbon Steel Zinc Plated	AISI 304, AISI 316
12	Nut	Carbon Steel Zinc Plated	AISI 304, AISI 316
13	Flat Washer	Carbon Steel Zinc Plated	AISI 304, AISI 316
14	Ring Wiper	EPDM	NBR
15	O-Ring	NBR	EPDM
16	Axis Guide	Brass Hpb59-1	
17	Washer	Brass Hpb59-1	
18	O-Ring	NBR	EPDM
19	Nut	Carbon Steel Zinc Plated	AISI 304, AISI 316
20	Wedge Nut	Brass Hpb59-1	Bronze ZQSn5-5-5

Note: For special material request other than standard specification, please indicate clearly on the inquiry or order list.
Size 4"~5" with 1pc of 1/2" bronze NPT tapping plug, size 6"~12 with 1pc of 3/4" bronze NPT tapping plug.

DN		Dimensions(mm)					
Inch	mm	L	H	D	D1	C	n-ΦL
4"	100	229	395	229	190.5	19.1	8-Φ19.1
5"	125	254	432	254	215.9	19.1	8-Φ22.2
6"	150	267	475	279	241.3	19.1	8-Φ22.2
8"	200	292	585	343	298.5	22.2	8-Φ22.2
10"	250	330	656	406	362	23.8	12-Φ25.4
12"	300	356	751	483	431.8	25.4	12-Φ25.4
14"	350	381	952	533	476.3	25.4	12-Φ28.6
16"	400	406	952	597	539.8	25.4	16-Φ28.6
18"	450	432	1178	635	577.9	25.4	16-Φ31.8
20"	500	457	1199	699	635	28.6	20-Φ31.8
24"	600	508	1367	813	749.3	30.1	20-Φ34.9

Vertical Indicator Post (IP), UL/FM Approved

IP

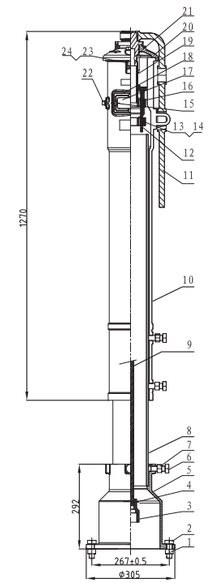

• Statement:
Vertical indicator post provides a means to operate a buried or otherwise inaccessible valve and able to indicate the open or shut position of the valve.

• Coating:
Fusion Bonded Epoxy Coating in accordance with ANSI/AWWA C550

MATERIAL SPECIFICATION

Part No.	Part	Standard Specification
1	Hex Nut	Carbon Steel Zinc Plated
2	Hex Bolt	Carbon Steel Zinc Plated
3	Socket	ASTM A536, 65-45-12
4	Cotter Pin	AISI 304
5	Base Flange	Cast Iron ASTM A126 Class B
6	Hex Bolt	Carbon Steel Zinc Plated
7	Hex Nut	Carbon Steel Zinc Plated
8	Standpipe	Carbon Steel ASTM A53
9	Stem 1" Square	Carbon Steel AISI 1045
10	Body	Cast Iron ASTM A126 Class B
11	Locking Wrench	ASTM A536, 65-45-12
12	Target Carrier Nut	AISI 304
13	Hex Bolt	Carbon Steel Zinc Plated
14	Hex Nut	Carbon Steel Zinc Plated
15	Hex Bolt	Carbon Steel Zinc Plated
16	Target	Cast Aluminum
17	Window Class	Plexiglass
18	Gasket	EPDM
19	Operating Nut	AISI 304
20	Top Section	Cast Iron ASTM A126 Class B
21	Snap Ring	AISI 1066
22	Plug	Malleable Iron
23	Square Nut	Carbon Steel Zinc Plated
24	Hex Bolt	Carbon Steel Zinc Plated

Field Adjustment:
1.Remove the Top Section from the top of the Indicator Post assembly;
2.Cut the required stem length and adjust the Standpipe to match up to the ground line;
3.Set the "OPEN" and "SHUT" targets for the appropriate valve size;
4.Reattach the Top Section to the top of the Indicator Post assembly.

Wall Indicator Post (WP), UL/FM Approved

WP

- Statement:
  Wall indicator post provides a means to operate a valve installed behind a wall and able to indicate the open or shut position of the valve.
- Coating:
  Fusion Bonded Epoxy Coating in accordance with ANSI/AWWA C550

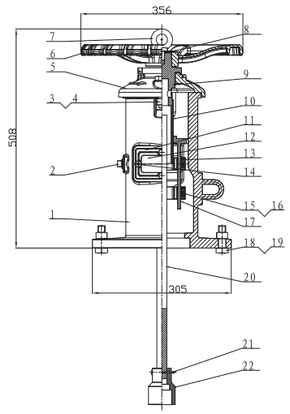

MATERIAL SPECIFICATION

Part No.	Part	Standard Specification
1	Body	Cast Iron ASTM A126 Class B
2	Plug	Malleable Iron
3	Square Nut	Carbon Steel Zinc Plated
4	Hex Bolt	Carbon Steel Zinc Plated
5	Cover	Cast Iron ASTM A126 Class B
6	Hand Wheel	ASTM A536, 65-45-12
7	Eye Bolt	Carbon Steel Zinc Plated
8	Gasket	Carbon Steel Zinc Plated
9	Snap Ring	AISI 1066
10	Operating NUT	AISI 304
11	Gasket	EPDM
12	Window Class	Plexiglass
13	Target	Cast Aluminum
14	Hex Bolt	Carbon Steel Zinc Plated
15	Hex Bolt	Carbon Steel Zinc Plated
16	Hex Nut	Carbon Steel Zinc Plated
17	Target Carrier Nut	AISI 304
18	Hex Nut	Carbon Steel Zinc Plated
19	Hex Bolt	Carbon Steel Zinc Plated
20	Stem 1" Square	Carbon Steel AISI 1045
21	Cotter Pin	AISI 304
22	Socket	ASTM A536, 65-45-12

Note: For special material request other than standard specification, please indicate clearly on the inquiry or order list;

Supervisory Switch for Indicator Post (ZXHQ)

ZXHQ

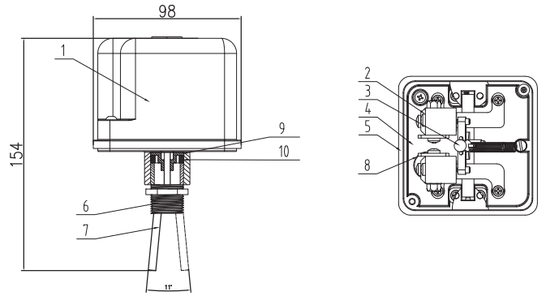

- Service Environment: Indoor or Outdoor use, all parts have corrosion resistant finishes
- Temperature Range: -10℃ - 80℃ (14° F - 176° F)
- Cover Tamper: Tamper Resistant Screws
  Optional Cover Tamper Switch Available
- Electrical Ratings: 15 Amps at 125/250VAC
- Appliance Standards: NFPA-13, NFPA-13D, NFPA-13R, NFPA-72
- Statement: The Model ZXHQ is a weather proof and tamper resistant switch for monitoring the open position of firesprinkler control valves of the post indicator, butterfly and other types.

MATERIAL SPECIFICATION

Part No.	Part	Standard Specification	Options
1	Outer Shell	ADC12	
2	Micro Switch		
3	The Rotating Shaft	PA66+GF30	
4	Base	ADC12	
5	Sealing Gasket	CR foam cotton	
6	Connecting Pipe	AISI 304	AISI 316
7	Stem	AISI 304	AISI 316
8	Micro Stents	Q235	AISI 304, AISI 316
9	Rubber Ring	EPDM	
10	Pressing Sleeve	PTFE	

Note: For special material request other than standard specification, please indicate clearly on the inquiry or order list.

TYPICAL ELECTRICAL CONNECTIONS

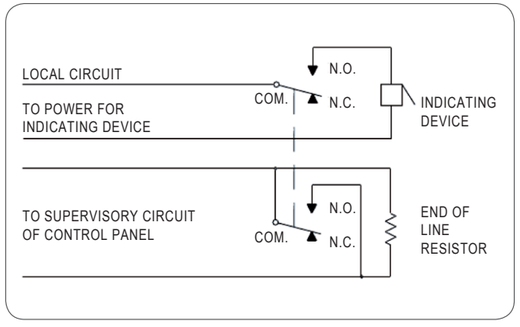

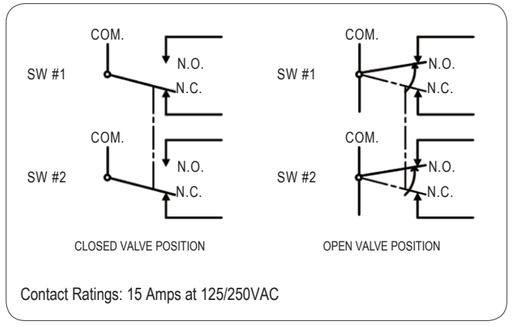

Contact Ratings: 15 Amps at 125/250VAC

Grooved Butterfly Valve with Tamper Switch (XD381X), UL/FM/VdS Approved

0C3073.7

XD381X

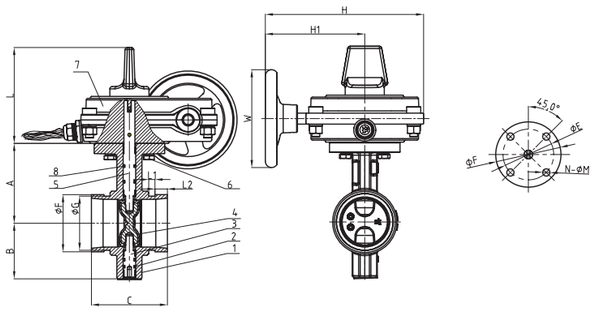

MATERIAL SPECIFICATION

Part No.	Part	Standard Specification	Options
1	Body	ASTM A536,65-45-12	
2	O-Ring	NBR	EPDM
3	Stub Shaft	AISI 431	
4	Disc	ASTM A536,65-45-12+EPDM	ASTM A536,65-45-12+NBR
5	Drive Shaft	AISI 431	
6	Hex Nut	Carbon Steel Zinc plated	
7	Signal Gearbox	Body:ASTM A536,65-45-12	
8	O-Ring	NBR	EPDM

Note: For special material request other than standard specification, please indicate clearly on the inquiry or order list.

RoHS NSF/ANSI 61 NSF/ANSI 372

- Design Standard: MSS SP-67
- Connection Ends: Groove to AWWA C606
- Top Flange Standard: ISO 5211
- Working Pressure: 300PSI
  175PSI, 200PSI and 250PSI available upon request
- Temperature Range: 0℃ - 100℃
- Coating: Fusion Bonded Epoxy Coating in accordance with ANSI/AWWA C550

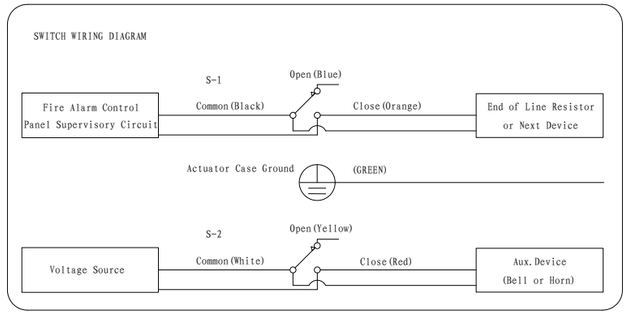

DN		Dimensions(mm)														
Inch	mm	A	B	C	F	G	L	L1	L2	H1	H	W	ΦE	ΦF	N-ΦM	ISO5211
2"	50	89	65	81	60.3	57.15	122.5	7.93	15.88	127	202.2	125	70	90	4-Φ10	F07
2.5"	65	102	71	97	73.0	69.09	122.5	7.93	15.88	127	202.2	125	70	90	4-Φ10	F07
3"	80	109	81	97	88.9	84.94	122.5	7.93	15.88	127	202.2	125	70	90	4-Φ10	F07
4"	100	128	95	116	114.3	110.08	122.5	9.53	15.88	127	202.2	125	70	90	4-Φ10	F07
5"	125	141	111	148	141.3	137.03	122.5	9.53	15.88	127	202.2	125	70	90	4-Φ10	F07
6"	150	153	133	148	168.3	163.96	122.5	9.53	15.88	139.5	215	225	70	90	4-Φ10	F07
8"	200	184	164	133	219.1	214.40	122.5	11.10	19.05	198.5	274	225	102	125	4-Φ12	F10
10"	250	216	196	159	273.1	268.28	122.5	12.70	19.05	198.5	274	225	102	125	4-Φ12	F10
12"	300	254	226	165	323.9	318.29	132.0	12.70	19.05	198.5	293.5	225	102	125	4-Φ12	F10

Note: Valve must not be installed with disc in full open position. Disc must be partly closed so that no part is protruding beyond end of valve body.

Grooved Butterfly Valve with Normally Closed Tamper Switch (XD381XG)

XD381XG

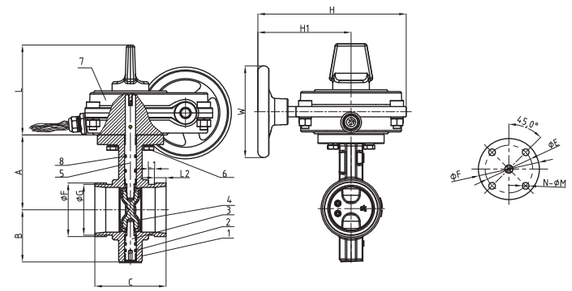

MATERIAL SPECIFICATION

Part No.	Part	Standard Specification	Options
1	Body	ASTM A536,65-45-12	
2	O-Ring	NBR	EPDM
3	Stub Shaft	SS431	
4	Disc	ASTM A536,65-45-12+EPDM	ASTM A536,65-45-12+NBR
5	Drive Shaft	SS431	
6	Hex Nut	Carbon Steel Zinc Plated	
7	Signal Gearbox	Body: ASTM A536,65-45-12	
8	O-Ring	NBR	EPDM

Note: For special material request other than standard specification, please indicate clearly on the inquiry or order list.

- Design Standard: MSS SP-67
- Connection Ends: Groove to AWWA C606
- Top Flange Standard: ISO 5211
- Working Pressure: 363PSI
  175PSI, 200PSI, 250PSI and 300PSI available upon request
- Temperature Range: 0℃ - 100℃
- Coating: Fusion Bonded Epoxy Coating in accordance with ANSI/AWWA C550

Signal description:

1.Switch parameters:16A 1/2HP 125/250VAC

2.Wiring diagram:

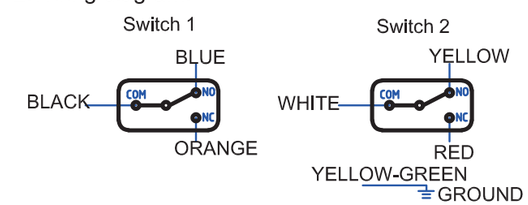

DN		Dimensions(mm)														
Inch	mm	A	B	C	F	G	L	L1	L2	H1	H	W	ΦE	ΦF	N-ΦM	ISO5211
2"	50	89	65.00	81.00	60.3	57.15	122.5	7.93	15.88	127	202.2	125	70	90	4-Φ10	F07
2.5"	65	102	71	97	73.0	69.09	122.5	7.93	15.88	127	202.2	125	70	90	4-Φ10	F07
3"	80	109	81	97	88.9	84.94	122.5	7.93	15.88	127	202.2	125	70	90	4-Φ10	F07
4"	100	128	95	116	114.3	110.08	122.5	9.53	15.88	127	202.2	125	70	90	4-Φ10	F07
5"	125	141	111	148	141.3	137.03	122.5	9.53	15.88	127	202.2	125	70	90	4-Φ10	F07
6"	150	153	133	148	168.3	163.96	122.5	9.53	15.88	139.5	215	225	70	90	4-Φ10	F07
8"	200	184	164	133	219.1	214.40	122.5	11.10	19.05	198.5	274	225	102	125	4-Φ12	F10
10"	250	216	196	159	273.1	268.28	122.5	12.70	19.05	198.5	274	225	102	125	4-Φ12	F10
12"	300	254	226	165	323.9	318.29	132.0	12.70	19.05	202	297.5	225	102	125	4-Φ12	F10

Grooved Butterfly Valve with Tamper Switch (XD381XC)

Tapped Body

XD381XC

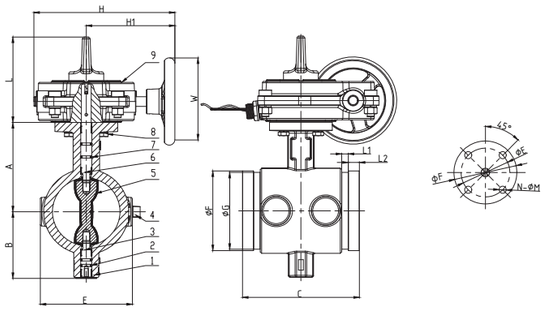

MATERIAL SPECIFICATION

Part No.	Part	Standard Specification	Options
1	Valve Body	ASTM A536,65-45-12	
2	O-Ring	NBR	EPDM
3	Stub Shaft	Stainless Steel,2Cr13	AISI 304, AISI 316, AISI 420, AISI 431
4	Plug	Bronze ASTM B584	Malleable Iron Galvaized
5	Disc	ASTM A536,65-45-12+EPDM	
6	Drive Shaft	Stainless Steel,2Cr13	AISI 304, AISI 316, AISI 420, AISI 431
7	O-Ring	NBR	EPDM
8	Bolt and Nut	Carton Steel Zinc Plated	AISI 304, AISI 316
9	Signal Gearbox	ASTM A536,65-45-12	

Note: For special material request other than standard specification, please indicate clearly on the inquiry or order list.

- Design Standard: MSS SP-67
- Connection Ends: Groove to AWWA C606
- Top Flange Standard: ISO 5211
- Working Pressure: 300PSI
- Temperature Range: 0℃ - 100℃
- Coating: Fusion Bonded Epoxy Coating in accordance with ANSI/AWWA C550 or painting upon request

DN		Dimensions(mm)															
Inch	mm	A	B	C	E	F	G	L	L1	L2	H1	H	W	N-ΦM	ISO5211	P	
																standard	optional
2.5"	65	102	71	152.5	94±1.5	73	69.09	122.5	7.93	15.88	127	202	125	4-Φ10	F07	1/2	3/4
3"	80	109	81	160.0	107±1.5	88.9	84.94	122.5	7.93	15.88	127	202	125	4-Φ10	F07	1/2	3/4
4"	100	128	95	167.6	132±1.5	114.3	110.08	122.5	9.53	15.88	127	202	125	4-Φ10	F07	3/4	1/2
6"	150	153	133	175.3	188±1.5	168.3	163.96	122.5	9.53	15.88	139.5	215	225	4-Φ10	F07	3/4	1/2
8"	200	184	165	200.7	236±1.5	219.1	214.4	122.5	11.1	19.05	198.5	274	225	4-Φ12	F10	3/4	1/2

Grooved Butterfly Valve with Tamper Switch (XD381X4-C)

Compact Design

XD381X4-C

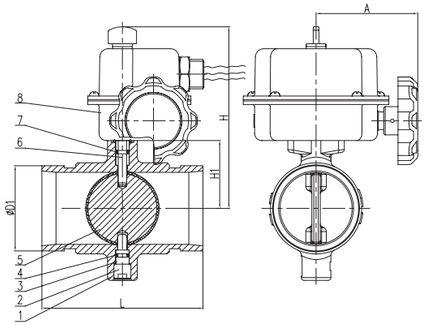

MATERIAL SPECIFICATION

Part No.	Part	Standard Specification	Options
1	Valve Body	ASTM A536 65-45-12	
2	Screw Plug	Carton Steel Zinc Plated	
3	Stub Shaft	Stainless Steel	AISI 304, AISI 316, AISI 420, AISI 431
4	O-Ring	NBR	EPDM
5	Disc	Carbon Steel+EPDM	
6	Drive Shaft	Stainless Steel	AISI 304, AISI 316, AISI 420, AISI 431
7	O-Ring	NBR	EPDM
8	Signal Gearbox	Carbon Steel	

Note: For special material request other than standard specification, please indicate clearly on the inquiry or order list.

- Design Standard: MSS SP-67
- Connection Ends: Groove to AWWA C606
- Top Flange Standard: ISO 5211
  Stem drive by keys and six-square
- Working Pressure: 200PSI,175PSI
- Temperature Range: 0℃ - 100℃
- Coating: Fusion Bonded Epoxy Coating in accordance with ANSI/AWWA C550 or painting upon request

DN		Dimensions(mm)				
Inch	mm	A	ØD1	H	H1	L
2"	50	72	60.3	128.5	48	114.0
2.5"	65	72	73.0	132.5	52	114.0

Double Eccentric Grooved Butterfly Valve with Tamper Switch (XD382X)

XD382X

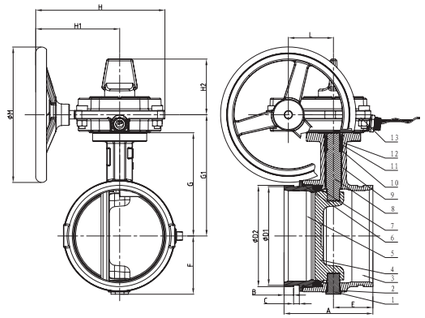

- Design Standard: MSS SP-67
- Connection Ends: Groove to AWWA C606
- Top Flange Standard: ISO 5211
  Stem drive by keys, parallel or diagonal square or flat head
- Working Pressure: 300PSI
  175PSI, 200PSI and 250PSI available upon request
- Temperature Range: 0℃- 100℃
- Coating: Fusion Bonded Epoxy Coating in accordance with ANSI/AWWA C550 or painting upon request

MATERIAL SPECIFICATION

Part No.	Part	Standard Specification	Options
1	Upper Stem	Stainless Steel	AISI 304, AISI 316, AISI 420, AISI 431
2	O-Ring	NBR	EPDM
3	Ringht Body	ASTM A536, 65-45-12	
4	Disc	AISI 316	
5	Left Body	ASTM A536, 65-45-12	
6	O-Ring	NBR	EPDM
7	Sealing Ring	EPDM	NBR
8	Lower Stem	Stainless Steel	AISI 304, AISI 316, AISI 420, AISI 431
9	Shaft Sleeve	AISI 304+PTFE	
10	O-Ring	NBR	EPDM
11	Stuffing Box	ZcuSn5pb5zn5	
12	O-Ring	NBR	EPDM
13	Signal Gearbox	ASTM A536, 65-45-12	

Note: For special material request other than standard specification, please indicate clearly on the inquiry or order list.

DN		Dimensions(mm)												
Inch	mm	A	B	C	ØD1	ØD2	E	F	G	ØM	H	H1	H2	L
2"	50	81	15.88	7.93	60.3	57.15	36.5	46	96.8	125	202.2	127	122.5	75
2.5"	65	96.8	15.88	7.93	73.0	69.09	45	53.3	108	125	202.2	127	122.5	75
3"	80	115.8	15.88	7.93	88.9	84.94	45	59.7	114.3	125	202.2	127	122.5	75
4"	100	147.6	15.88	9.53	114.3	110.08	55.4	73.2	133.4	125	202.2	127	122.5	75
5"	125	147.6	15.88	9.53	141.3	137.03	65.5	84.8	158.8	125	202.2	127	122.5	75
6"	150	147.6	15.88	9.53	168.3	163.96	65.5	97.3	171.5	225	215	139.5	122.5	75
8"	200	133.4	19.05	11.10	219.1	214.4	59.2	127	203.2	225	274	198.5	122.5	75
10"	250	158.8	19.05	12.70	273.1	268.28	76.2	155.7	247.7	225	274	198.5	122.5	75
12"	300	165.1	19.05	12.70	323.9	318.29	76.2	181.1	273.1	225	293.5	198.5	132	87

Grooved Butterfly Valve (D81X4, D381X4)

D81X4

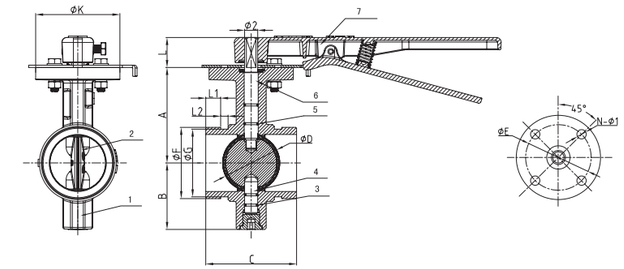

NSF/ANSI 61 NSF/ANSI 372

- Design Standard: MSS SP-67
- Connection Ends: Groove to AWWA C606
- Top Flange Standard: ISO 5211
  Stem drive by keys, parallel or diagonal square or flat head
- Working Pressure: 300PSI
  175PSI, 200PSI and 250PSI available upon request
- Temperature Range: 0℃- 100℃
- Coating: Fusion Bonded Epoxy Coating in accordance with ANSI/AWWA C550 or painting upon request

MATERIAL SPECIFICATION

Part No.	Part	Standard Specification	Options
1	Valve Body	ASTM A536, 65-45-12	
2	Disc	ASTM A536, 65-45-12+EPDM	ASTM A536, 65-45-12+NBR
3	O-Ring	NBR	EPDM
4	Stem	Stainless Steel	AISI 304, AISI 316, AISI 420, AISI 431
5	O-Ring	NBR	EPDM
6	Stem	Stainless Steel	AISI 304, AISI 316, AISI 420, AISI 431
7	Lever	ASTM A536, 65-45-12	Aluminum
8	Signal Gearbox	ASTM A536, 65-45-12	

Note: For special material request other than standard specification, please indicate clearly on the inquiry or order list.

D381X4

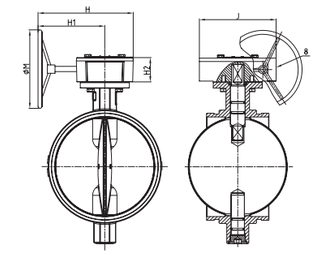

DN		Dimensions(mm)																		
Inch	mm	A	B	C	ΦD	ΦF	ΦG	L1	L2	L	ΦK	H	H1	H2	J	ΦM	Φ2	ISO 5211	ΦE	N-Φ1
2"	50	89	65	81	50.3	60.3	57.15	15.88	7.93	32	90	206	158	52	114	150	14	F07	70	4-Φ10
2.5"	65	102	71	97	60.8	73.0	69.09	15.88	7.93	32	90	206	158	52	114	150	14	F07	70	4-Φ10
3"	80	109	81	97	76	88.9	84.94	15.88	7.93	32	90	206	158	52	114	150	14	F07	70	4-Φ10
4"	100	128	95	116	98.5	114.3	110.08	15.88	9.53	32	90	206	158	52	114	150	16	F07	70	4-Φ10
5"	125	141	111	148	122.6	141.3	137.03	15.88	9.53	32	90	206	158	52	114	150	16	F07	70	4-Φ10
6"	150	153	133	148	148	168.3	163.96	15.88	9.53	32	90	206	158	52	114	150	20	F07	70	4-Φ10
8"	200	184	164	133	199	219.1	214.4	19.05	11.10	45	125	310	239	69	167	300	26	F10	102	4-Φ12
10"	250	216	196	159	252	273.0	268.28	19.05	12.70	45	125	310	239	69	167	300	26	F10	102	4-Φ12
12"	300	254	226	165	300.5	323.9	318.29	19.05	12.70	45	125	307	229	73	190	300	28	F10	102	4-Φ12
14"	377	290	241	178	324	377	371.4	23.8	12.7	45	150	307	229	73	190	300	31.7	F12	125	4-Ø14

Note: Valve must not be installed with disc in full open position. Disc must be partly closed so that no part is protruding beyond end of valve body.

OC2700.7CL

Wafer Butterfly Valve with Tamper Switch (XD371X), UL/FM/VdS Approved

0C3073.7

XD371X

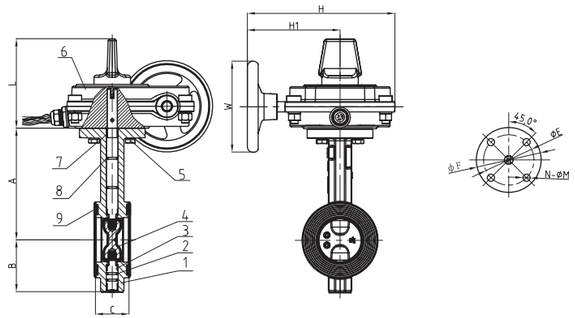

c UL us LISTED FM APPROVED VdS **RoHS** NSF/ANSI 61 NSF/ANSI 372

- Design Standard: MSS SP-67
- Top Flange Standard: ISO 5211
- Working Pressure: 300PSI
  175PSI,200PSI and 250PSI available upon request
- Temperature Range: 0℃ - 100℃
- Coating: Fusion Bonded Epoxy Coating in accordance with ANSI/AWWA C550
- Flange specification: ASME B16.1 CL125, ASME B16.5 CL150

MATERIAL SPECIFICATION

Part No.	Part	Standard Specification	Options
1	Valve Body	ASTM A536,65-45-12	
2	O-Ring	NBR	EPDM
3	Stub Shaft	AISI 431	
4	Disc	ASTM A536,65-45-12+EPDM	ASTM A536,65-45-12+NBR
5	Hex Nut	Carbon Steel Zinc plated	
6	Signal Gearbox	Body:ASTM A536,65-45-12	
7	Drive Shaft	AISI 431	
8	O-Ring	NBR	EPDM
9	End Face Seal	EPDM	NBR

Note: For special material request other than standard specification, please indicate clearly on the inquiry or order list.

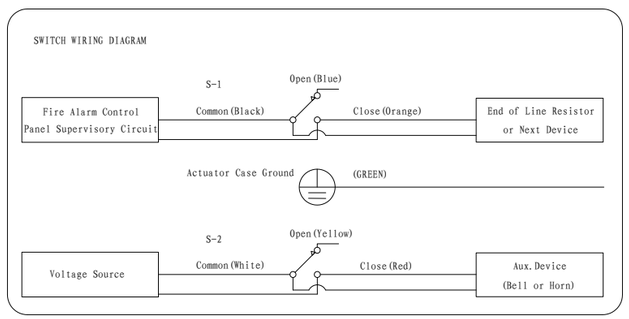

DN		Dimensions(mm)										
Inch	mm	A	B	C	L	H1	H	W	ISO5211	ΦE	ΦF	N-ΦM
2"	50	140.5	65	43	122.5	127	202.2	125	F07	70	90	4-Φ10
2.5"	65	153	71	46	122.5	127	202.2	125	F07	70	90	4-Φ10
3"	80	157.5	81	46	122.5	127	202.2	125	F07	70	90	4-Φ10
4"	100	176	95	52	122.5	127	202.2	125	F07	70	90	4-Φ10
5"	125	191	111	56	122.5	127	202.2	125	F07	70	90	4-Φ10
6"	150	202.5	133	56	122.5	139.5	215	225	F07	70	90	4-Φ10
8"	200	243.5	164	60	122.5	198.5	274	225	F10	102	125	4-Φ12
10"	250	273	196	68	122.5	198.5	274	225	F10	102	125	4-Φ12
12"	300	311	226	78	132	198.5	293.5	225	F10	102	125	4-Φ12

Lugged Wafer Butterfly Valve with Tamper Switch (XD371XL), UL/FM/VdS Approved

0C3073.7

XD371XL

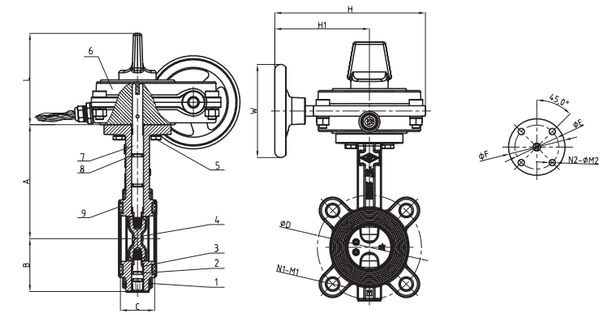

c UL us LISTED FM APPROVED VdS **RoHS** NSF/ANSI 61 NSF/ANSI 372

- Design Standard: MSS SP-67
- Top Flange Standard: ISO 5211
- Working Pressure: 300PSI
  175PSI,200PSI and 250PSI available upon request
- Temperature Range: 0℃ - 100℃
- Coating: Fusion Bonded Epoxy Coating in accordance with ANSI/AWWA C550
- Flange specification: ASME B16.1 CL125, ASME B16.5 CL150

MATERIAL SPECIFICATION

Part No.	Part	Standard Specification	Options
1	Valve Body	ASTM A536,65-45-12	
2	O-Ring	NBR	EPDM
3	Stub Shaft	AISI 431	
4	Disc	ASTM A536,65-45-12+EPDM	ASTM A536,65-45-12+NBR
5	Hex Nut	Carbon Steel Zinc plated	
6	Signal Gearbox	Body:ASTM A536,65-45-12	
7	Drive Shaft	AISI 431	
8	O-Ring	NBR	EPDM
9	End Face Seal	EPDM	NBR

Note: For special material request other than standard specification, please indicate clearly on the inquiry or order list.

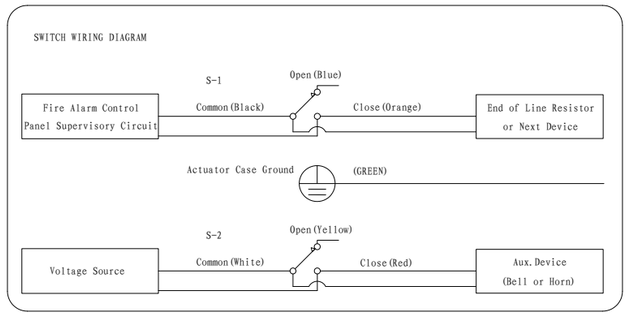

DN		Dimensions(mm)												
Inch	mm	A	B	C	L	H1	H	W	ØD	N1-M1	N2-M2	ISO5211	ΦE	ΦF
2"	50	140.5	65	43	122.5	127	202.2	125	120.7	4-M16	4-5/8	F07	70	90
2.5"	65	153	71	46	122.5	127	202.2	125	139.7	4-M16	4-5/8	F07	70	90
3"	80	157.5	81	46	122.5	127	202.2	125	152.4	8-M16	4-5/8	F07	70	90
4"	100	176	95	52	122.5	127	202.2	125	190.5	8-M16	8-5/8	F07	70	90
5"	125	191	111	56	122.5	127	202.2	125	215.9	8-M16	8-3/4	F07	70	90
6"	150	202.5	133	56	122.5	139.5	215	225	241.3	8-M20	8-3/4	F07	70	90
8"	200	243.5	164	60	122.5	198.5	274	225	298.5	8-M20	8-3/4	F10	102	125
10"	250	273	196	68	122.5	198.5	274	225	362	12-M20	12-7/8	F10	102	125
12"	300	311	226	78	132	198.5	293.5	225	431.8	12-M20	12-7/8	F10	102	125

Grooved Resilient Swing Check Valve (H84X), UL/FM/LPCB Approved

0C3073.7

H84X

NSF/ANSI 61 NSF/ANSI 372

- Connection Ends: Groove to AWWA C606
- Working Pressure: 300PSI
  200PSI and 250PSI available upon request
- Temperature Range: 0℃- 100℃
- Coating: Fusion Bonded Epoxy Coating in accordance with ANSI/AWWA C550 or painting upon request

0C3073.7

H84XF4

NSF/ANSI 61 NSF/ANSI 372

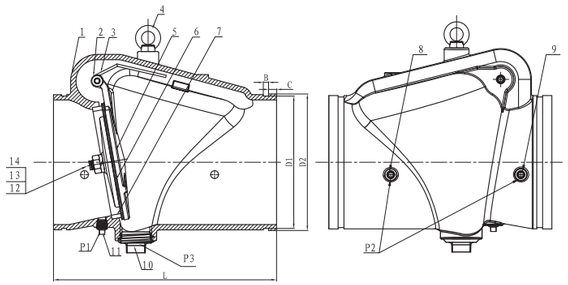

MATERIAL SPECIFICATION

Part No.	Part	Standard Specification	Options
1	Valve Body	ASTM A536, 65-45-12	
2	Hinge Pin	AISI 420	
3	Spring	AISI 304	AISI 316
4	Eye Bolt	Carbon Steel Zinc Plated	
5	Disc	DN50-100 AISI 304 DN150-300 ASTM A536, 65-45-12	AISI 304
6	Disc Sealing Ring	EPDM	
7	Seat Ring	ASTM B62 C83600 (Pressed Fit)	AISI 304, AISI 316 Pressed Fit or Threaded
8	Plug	Malleable Iron Galvanized	Bronze ASTM B584
9	Plug	Malleable Iron Galvanized	Bronze ASTM B584
10	Plug	Malleable Iron Galvanized	Bronze ASTM B584
11	Plug	Malleable Iron Galvanized	Bronze ASTM B584
12	Bolt	AISI 304	AISI 316
13	Washer	AISI 304	AISI 316
14	Nut	AISI 304	AISI 316

Note: For special material request other than standard specification, please indicate clearly on the inquiry or order list.

DN		Dimensions(mm)								
Inch	mm	L	D1	D2	B	C	P1	P3		P2
								Standard	Optional	
2"	50	171	57.15	60.3	7.93	15.88	1/2-14NPT	1/2-14NPT	1-11.5NPT	3/8-18NPT
2.5"	65	184	69.09	73	7.93	15.88	1/2-14NPT	1/2-14NPT	1 1/4-11.5NPT	3/8-18NPT
3"	80	197	84.94	88.9	7.93	15.88	1/2-14NPT	1/2-14NPT	1 1/4-11.5NPT	3/8-18NPT
4"	100	210	110.08	114.3	9.53	15.88	1/2-14NPT	1/2-14NPT	2-11.5NPT	1/2-14NPT
5"	125	248	137.03	141.3	9.53	15.88	1/2-14NPT	1/2-14NPT	2-11.5NPT	1/2-14NPT
6"	150	324	163.96	168.3	9.53	15.88	1/2-14NPT	1/2-14NPT	2-11.5NPT	1/2-14NPT
8"	200	371	214.4	219.1	11.13	19.05	1/2-14NPT	1/2-14NPT	2-11.5NPT	1/2-14NPT
10"	250	457	268.28	273	12.7	19.05	1/2-14NPT	1/2-14NPT	2-11.5NPT	1/2-14NPT
12"	300	535	318.29	323.9	12.7	19.05	1/2-14NPT	1/2-14NPT	2-11.5NPT	1/2-14NPT

Double Door Grooved Check Valve (DH87X)

DH87X

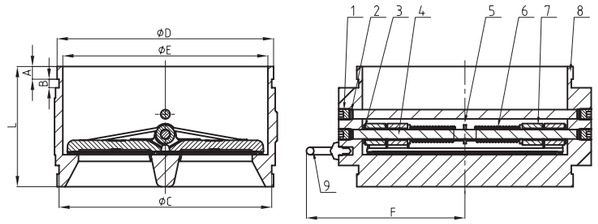

- Connection Ends: Groove to AWWA C606
- Working Pressure: 300PSI
  200PSI and 250PSI available upon request
- Temperature Range: 0℃- 100℃
- Coating: Fusion Bonded Epoxy Coating in accordance with ANSI/AWWA C550 or painting upon request

MATERIAL SPECIFICATION

Part No.	Part	Standard Specification	Options
1	Countersunk Hex Head Screws	Carbon Steel Zinc Plated	
2	Seal Ring	EPDM	
3	Gasket	PTFE	
4	Shaft	AISI 420	AISI 304, AISI 316, AISI 431
5	Gasket	PTFE	
6	Spring	AISI 304	
7	Disc	AISI 304	AISI 316,QT450-10
8	Body	ASTM A536, 65-45-12	
9	Eye Bolt	Carbon Steel Zinc Plated	

Note: For special material request other than standard specification, please indicate clearly on the inquiry or order list.

DN		Dimensions(mm)						
Inch	mm	A	B	C	D	E	F	L
8"	219.1	19.1	11.1	214.4	219	200	165	160
10"	273.0	19.1	12.7	268.28	273	253	203	180
12"	323.9	19.1	12.7	318.29	324	307	228	180
14"	377.0	23.8	12.7	371.1	377	354	258	200

Flanged Resilient Swing Check Valve (H44X2/ H44X2A), UL/FM/LPCB Approved

H44X2

NSF/ANSI 61 NSF/ANSI 372

- Connection Ends: Flange to ASME B16.1 CL 125
- Working Pressure: 300PSI
  200PSI and 250PSI available upon request
- Temperature Range: 0℃- 100℃
- Coating: Fusion Bonded Epoxy Coating in accordance with ANSI/AWWA C550

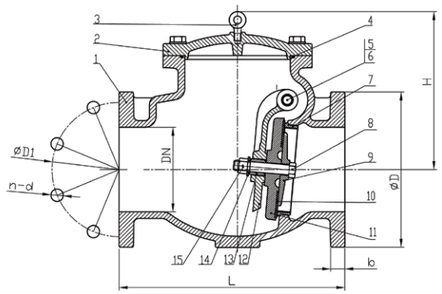

MATERIAL SPECIFICATION

Part No.	Part	Standard Specification	Options
1	Valve Body	ASTM A536, 65-45-12	
2	Bonnet	ASTM A536, 65-45-12	
3	Eye Bolt	Carbon Steel Zinc Plated	
4	O-Ring	NBR	EPDM
5	Hinge Pin	AISI 304	
6	Hinge Bushing	Brass ASTM B16 C36000/Hpb63-3	
7	Seat Ring	Bronze ASTM B62 C83600/ZQSn5-5-5(Pressed Fit)	AISI 304, AISI 316 Pressed Fit or Threaded
8	Disc Seat Bolt	AISI 304	
9	Retainer Washer	Bronze ASTM B62 C83600/ZQSn5-5-5	
10	Disc Sealing Ring	EPDM	AISI 304, AISI 316, Bronze ASTM B62
11	Disc	ASTM A536, 65-45-12	
12	Clapper Arm	ASTM A536, 65-45-12	
13	Stud Bushing	Brass ASTM B16 C36000/Hpb63-3	
14	O-Ring	NBR	EPDM
15	Nut	AISI 304	AISI 316

Note: For special material request other than standard specification, please indicate clearly on the inquiry or order list.

DN		Dimensions(mm)						
Inch	mm	L		D	D1	b	n-Φd	H
		Standard	Optional					
2"	50	203	203	152	120.5	16	4-Φ19.1	133
2.5"	65	254	216	178	139.5	17.5	4-Φ19.1	150
3"	80	278	241	191	152.5	19	4-Φ19.1	150
4"	100	330	292	229	190.5	24	8-Φ19.1	218
6"	150	406	356	279	241.5	25.5	8-Φ22.2	290
8"	200	495	495	343	298.5	28.5	8-Φ22.2	330
10"	250	622	622	406	362	30.5	12-Φ25.4	350
12"	300	660	698	483	432	32	12-Φ25.4	376

Note: Standard of Face-to-Face in according with AWWA C508.
Optional of Face-to-Face in according with ASME B16.10 CL125.

Flanged Resilient Swing Check Valve (H44T2/H44T2A), UL/FM/LPCB Approved

H44T2

- Design Standard: AWWA C508
- Flange Specification: ASME B16.1 CL125
- Working Pressure: 300PSI
  200PSI and 250PSI available upon request
- Temperature Range: -10℃ -250℃
- Coating: Fusion Bonded Epoxy Costing Complies wish AWWA C550

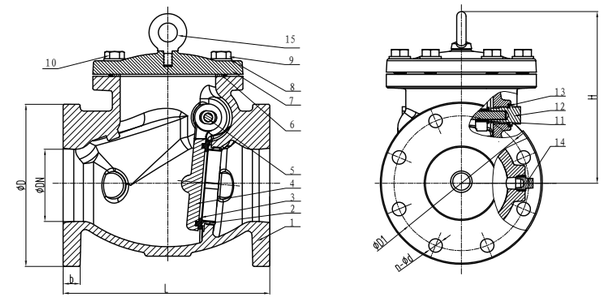

MATERIAL SPECIFICATION

Part No.	Part	Standard Specification	Options
1	Valve Body	ASTM A536	
2	Seat Ring	C83600	
3	Flap Seat	C83600	
4	Disc	ASTM A536	
5	Hinge Pin	AISI 420	AISI 304, AISI 316
6	Flange Gasket	Graphite+SS304	
7	Bonnet HGT	ASTM A536	
8	Flat Waser	45# Steel	
9	Bolts	Carbon Steel	AISI 304, AISI 316
10	Bolts	Carbon Steel	AISI 304, AISI 316
11	Bushing	CW617N	
12	Plug	AISI 304	AISI 304
13	Gasket	PTFE	
14	Plugged	C89833	
15	Eye Bolt	Carbon Steel	AISI 304, AISI 316

Note: For special material request other than standard specification, please indicate clearly on the inquiry or order list.

DN		Dimensions(mm)						
Inch	mm	L	D	D1	b	H	n	Φd
2"	50	203	152	120	16	133	4	19
2.5"	65	216	178	140	17.5	150	4	19
3"	80	241	191	152.4	19	150	4	19
4"	100	292	229	190.5	24	218	8	19
6"	150	356	279	241.3	25.5	290	8	22.2
8"	200	495	343	298.5	28.5	330	8	22.2
10"	250	622	406	362	30.5	350	12	25.4
12"	300	698	483	431.8	32	376	12	25.4

Double Door Wafer Check Valve (DH77X), UL Listed

OC2700.7CL

DH77X

NSF/ANSI 61 NSF/ANSI 372

- Connection Ends: ASME B16.1 CL 125, ASME B16.5 CL 150
- Working Pressure: 300PSI
  200PSI and 250PSI available upon request
- Temperature Range: 0℃- 100℃
- Coating: Fusion Bonded Epoxy Coating in accordance with ANSI/AWWA C550

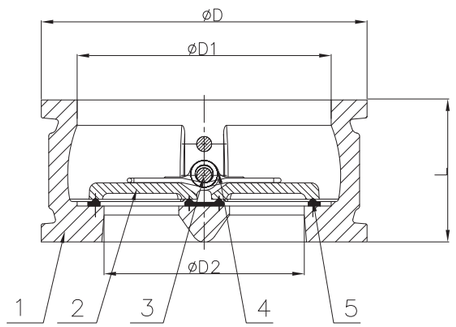

MATERIAL SPECIFICATION

Part No.	Part	Standard Specification	Options
1	Valve Body	ASTM A536, 65-45-12	
2	Disc	AISI 316	ASTM A536, 65-45-12, SS316, AL-Bronze UNC 95400
3	Stem	AISI 420	AISI 304, AISI 316, AISI 416
4	Spring	AISI 304	AISI 316
5	Rubber Seat	EPDM	NBR

Note: For special material request other than standard specification, please indicate clearly on the inquiry or order list.

DN		Dimensions(mm)			
Inch	mm	L	D	D1	D2
2"	50	54	106	68	46
2.5"	65	60	127	78	60
3"	80	57	134	102	70
4"	100	67	162	117	84
5"	125	83	194	145	115
6"	150	95	218	170	134
8"	200	127	277	226	184
10"	250	140	336	265	220
12"	300	181	406	310	260
14"	350	184	447	360	302
16"	400	191	505	410	350

Backwater Valve (HSB4X)

HSB4X

- Connection Ends: ASTM A888
- Working Pressure: 175PSI
- Temperature Range: 0℃ - 80℃
- Coating: Painting

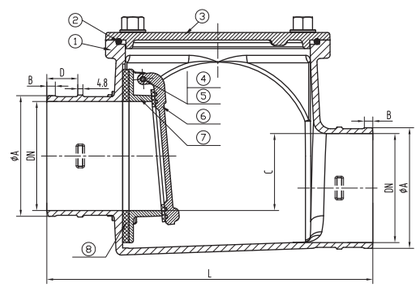

MATERIAL SPECIFICATION

Part No.	Part	Standard Specification
1	Valve Body	ASTM A536, 65-45-12
2	O-Ring	NBR
3	Bonnet	ASTM A536, 65-45-12
4	Bolt	AISI 304
5	Nut	AISI 304
6	Disc	ASTM B62 C83600
7	Seat	ASTM B62 C83600
8	Disc Seat Ring	EPDM

Note: For special material request other than standard specification, please indicate clearly on the inquiry or order list.

DN		PSI	Dimensions(mm)				
Inch	mm		L	A±2.29	B	C (min)	D
2"	50	175	203	61.21	6.35	25	29
3"	80	175	241	86.61	6.35	38	29
4"	100	175	305	112.78	7.87	50	29
6"	125	175	394	161.54	7.87	76	38
8"	150	175	457	214.38	7.87	101	51

Micro Air Bleeding Valve (ARVX)

ARVX

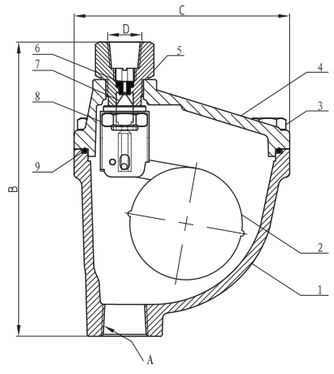

- Connection Ends: ASME B1.20.1
- Working pressure: 300PSI
- Temperature Range: 0℃ - 80℃
- Coating: Fusion Bonded Epoxy Coating in accordance with ANSI/AWWA C550

MATERIAL SPECIFICATION

Part No.	Part	Standard Specification
1	Valve Body	ASTM A536 64-45-12
2	Ball	AISI 304
3	Hex Bolt	Carbon Steel Zinc Plated
4	Bonnet	ASTM A536 64-45-12
5	Exhaust Joint	Brass HPb59-1
6	Exhaust Gasket	EPDM
7	Valve Needle	AISI 304
8	Nut	AISI 304
9	O-Ring	NBR

Note: For special material request other than standard specification, please indicate clearly on the inquiry or order list.

DN		Dimensions(mm)			
Inch	mm	A	B	C	D
1/2"	15	1/2-14NPT	157	115	3/8-18NPT
3/4"	20	3/4-14NPT	157	115	3/8-18NPT
1"	25	1-11.5NPT	157	115	3/8-18NPT
11/4"	32	1-1/4-11.5NPT	157	115	3/8-18NPT
11/2"	40	1-1/2-11.5NPT	157	115	3/8-18NPT

Grooved Y-Type Strainer (V8), UL Listed

0E3072.7

V8

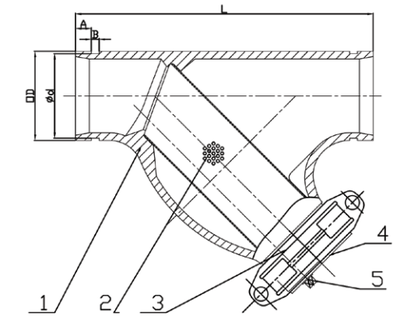

NSF/ANSI 61 NSF/ANSI 372

- Connection Ends: Groove to AWWA C606
- Working Pressure: 300PSI
  200PSI and 250PSI available upon request
- Temperature Range: 0℃- 100℃
- Coating: Fusion Bonded Epoxy Coating in accordance with ANSI/AWWA C550 or painting upon request

MATERIAL SPECIFICATION

Part No.	Part	Standard Specification	Options
1	Valve Body	ASTM A536, 65-45-12	
2	Screen	AISI 304	AISI 316
3	Rigid Coupling	ASTM A536, 65-45-12	
4	Cap	ASTM A536, 65-45-12	
5	Plug	Malleable Iron Galvanized	Bronze ASTM B584

Note: For special material request other than standard specification, please indicate clearly on the inquiry or order list.

DN		Dimensions(mm)				
Inch	mm	L	OD	d	A	B
2"	50	247.5	60.3	57.15	15.88	7.92
2.5"	65	273	73	69.09	15.88	7.92
3"	80	298.5	88.9	84.94	15.88	7.92
4"	100	362	114.3	110.08	15.88	9.52
5"	125	419	141.3	137.03	15.88	9.52
6"	150	470	168.3	163.96	15.88	9.52
8"	200	609.5	219.1	214.4	19.05	11.13
10"	250	686	273	268.28	19.05	12.7
12"	300	762	323.9	318.29	19.05	12.7

Flanged Y-Type Strainer (V4), UL Listed

OE3072.7

V4

NSF/ANSI 61 NSF/ANSI 372

- Connection Ends: Flange to ASME B16.1 Class 125 / ASME B16.42 Class 150
- Working Pressure: 300PSI
  200PSI and 250PSI available upon request
- Temperature Range: -10℃- 200℃ Graphite Gasket
  0℃- 100℃ Rubber Gasket
- Coating: Fusion Bonded Epoxy Coating in accordance with ANSI/AWWA C550

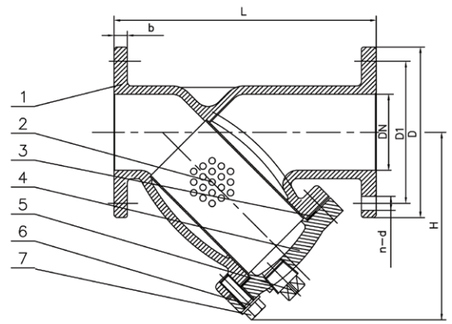

MATERIAL SPECIFICATION

Part No.	Part	Standard Specification	Options
1	Valve Body	ASTM A536 65-45-12	
2	Screen	AISI 304 (Perforated)	AISI 304, AISI 316 (Perforated, Knitted, Double Screen)
3	Gasket	Graphite + Acanthopore Plate	EPDM
4	Bonnet	ASTM A536 65-45-12	
5	Plug	Malleable Iron Galvanized	Bronze ASTM B584
6	Bolt	Carbon Steel Zinc Plated	AISI 304, AISI 316
7	Flat Washer	Carbon Steel Zinc Plated	AISI 304, AISI 316

Note: For special material request other than standard specification, please indicate clearly on the inquiry or order list.

DN		Dimensions(mm)					
Inch	mm	L	D	D1	b	n-Φd	H
2"	50	200	152	120.5	16	4-Φ19.1	155
2.5"	65	254	178	139.5	17.5	4-Φ19.1	165
3"	80	257	191	152.5	19	4-Φ19.1	180
4"	100	308	229	190.5	24	8-Φ19.1	229
5"	125	397	254	216	24	8-Φ22.2	285
6"	150	470	279	241.5	25.5	8-Φ22.2	311
8"	200	549	343	298.5	28.5	8-Φ22.2	394
10"	250	654	406	362	30.5	12-Φ25.4	487
12"	300	759	483	432	32	12-Φ25.4	547

Grooved Wet Alarm Check Valve (ZSFZ8X9)

ZSFZ8X9

- Connection Ends: Groove to AWWA C606
- Working Pressure: 300PSI
  200PSI and 250PSI available upon request
- Temperature Range: 0℃- 100℃
- Coating: Painting or Fusion Bonded Epoxy Coating in accordance with ANSI/AWWA C550

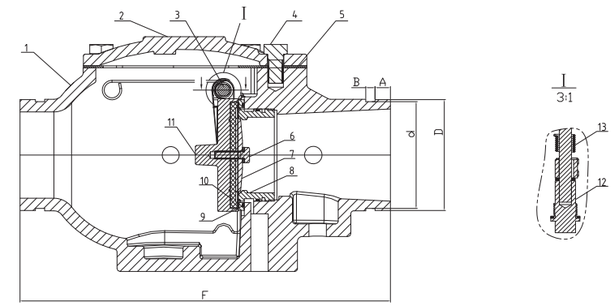

MATERIAL SPECIFICATION

Part No.	Part	Standard Specification	Options
1	Valve Body	ASTM A536, 65-45-12	
2	Bonnet	ASTM A536, 65-45-12	
3	Pin	AISI 304	AISI 316
4	Hex Bolt	Carbon Steel Zinc Plated	
5	Gasket	EPDM	NBR
6	Hex Bolt	AISI 304	AISI 316
7	Gland	Brass H62	
8	Seat	C89833	
9	O-Ring	NBR	EPDM
10	Gasket	EPDM	
11	Disc	C89833	
12	Plug	AISI 304	AISI 316
13	Spring	AISI 321	

Note: For special material request other than standard specification, please indicate clearly on the inquiry or order list.

DN		Dimensions(mm)					
Inch	mm	OD	A	B	℄ d	℄ D	F
3"	80	88.9	15.88	7.93	84.94	88.9	320.3
4"	100	114.3	15.88	9.53	110.08	114.3	382
6"	150	168.3	15.88	9.53	163.96	168.3	406.4
8"	200	219.1	19.05	11.1	214.4	219.1	446

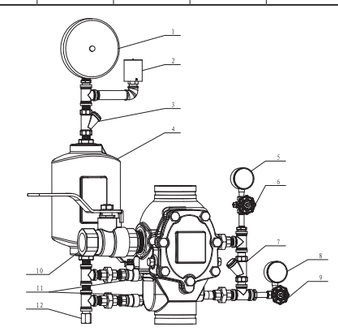

External accessories			
Part No.	Part	Part No.	Part
1	Alarm	7	Check Valve
2	Pressure Switch	8	Pressure Gauge
3	Strainer	9	Ball Valve
4	Decelerator	10	Ball Valve
5	Pressure Gauge	11	Ball Valve
6	Ball Valve	12	0rifice

Flanged Wet Alarm Valve (ZSFZ4X)

ZSFZ4X

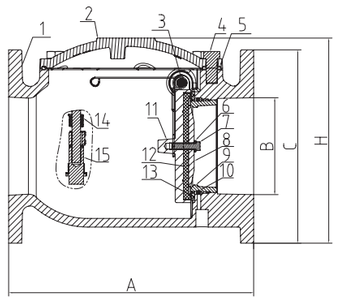

- Connection Ends: ASME B16.1 CL 125
- Working Pressure: 300PSI
  200PSI and 250PSI available upon request
- Temperature Range: 0℃- 100℃
- Coating: Painting
- Statement: The alarm check valve works as a check valve by preventing the reverse flow of water from the system piping to the water supply. The valve is trimmed with a water bypass line, which has an in-line swing check valve. The bypass line allows pressure surges to enter the system and to be trapped above the alarm check valve's clapper without the clapper lifting and causing false alarms.

  When a significant flow of water occurs, such as from an open sprinkler, the alarm valve's clapper lifts and allows water to enter the system. Simultaneously, water enters an intermediate chamber, which allows the water to activate an alarm either through a water motor alarm or through a water pressure alarm. These alarms continue to sound until the flow of water is stopped.

MATERIAL SPECIFICATION

Part No.	Part	Standard Specification	Options
1	Valve Body	ASTM A536,65-45-12	
2	Bonnet	ASTM A536,65-45-12	
3	Pin	AISI 304	AISI 316
4	Hex Bolt	Carbon Steel Zinc Plated	
5	Gasket	EPDM	NBR
6	Spring Washer	AISI 304	
7	Hex Bolt	AISI 304	
8	Gland	Brass H62	
9	Seat	C83600	
10	O-Ring	NBR	EPDM
11	Disc	Brass H62	
12	Gasket	EPDM	
13	O-Ring	NBR	
14	Spring	AISI 321	
15	Plug	AISI 304	

Note: For special material request other than standard specification, please indicate clearly on the inquiry or order list.

DN		Dimensions(mm)			
Inch	mm	A	B	C	H
3"	80	241	80	191	235
4"	100	292	100	229	230
6"	150	356	150	279	298
8"	200	495	200	343	352

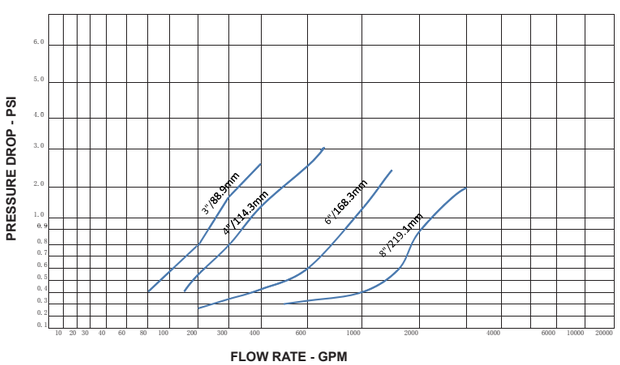

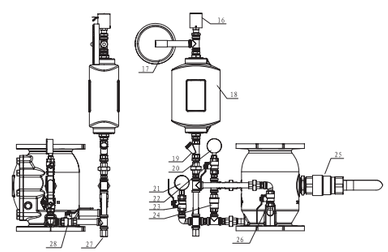

External accessories			
Part No.	Part	Part No.	Part
16	Pressure Switch	23	Ball Valve
17	Alarm	24	Check Valve
18	Decelerator	25	Ball Valve
19	Strainer	26	Ball Valve
20	Pressure Gauge	27	Water Valve
21	Pressure Gauge	28	Ball Valve
22	Ball Valve		

Deluge Alarm Valve (SK790X)

SK790X

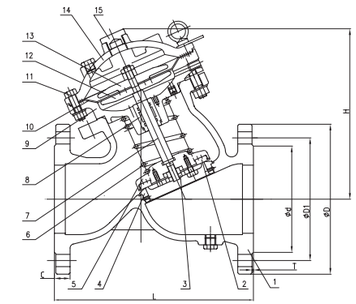

- Connection Ends: ASME B16.1 CL 125
- Working Pressure: 300PSI
  200PSI and 250PSI available upon request
- Temperature Range: 0℃- 100℃
- Coating: Fusion Bonded Epoxy Coating in accordance with ANSI/AWWA C550
- Statement: SK790X Deluge Alarm Valve is a diaphragm type of hydraulic control valve driven by the hydraulic pressure within the piping system, functioning as flow control and alarming device in the sprinkler and pre-action system, i.e. to start the sprinkler system for quenching of the fire and send out fire alarm through the fire bell when there is fire detected.

MATERIAL SPECIFICATION

Part No.	Part	Standard Specification
1	Valve Body	ASTM A536, 65-45-12
2	Main Gasket	EPDM
3	Gland of Main Disc	ASTM A536, 65-45-12
4	Seat	AISI 304
5	Main Disc	ASTM A536, 65-45-12
6	Spring	Stainless Steel 4Cr13
7	Stem	AISI 304
8	Bushing	Brass H62
9	Middle Bonnet	ASTM A536, 65-45-12
10	Diaphragm	EPDM
11	Bolt	AISI 304
12	Up Gland	ASTM A536, 65-45-12
13	Bottom Gland	ASTM A536, 65-45-12
14	Up Bonnet	ASTM A536, 65-45-12
15	Cap Plug	Brass H62

Note: For special material request other than standard specification, please indicate clearly on the inquiry or order list.

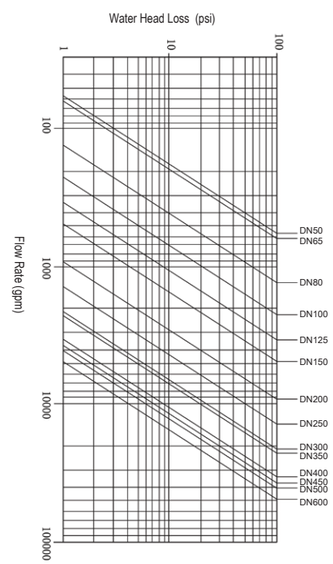

DN	50	65	80	100	125	150	200	250	300	350	400	450	500	600
Kv	41	53	105	175	285	402	730	1160	1400	1770	3010	3225	3395	4272

DN		Dimensions(mm)					
Inch	mm	L	H	D	D1	b	n-ΦL
2"	50	206	170	152	120.5	16	4-Φ19.1
2.5"	65	211	195	178	139.5	17.5	4-Φ19.1
3"	80	249	215	191	152.5	19	4-Φ19.1
4"	100	320	255	229	190.5	24	8-Φ19.1
6"	150	414	360	279	241.5	25.5	8-Φ22.2
8"	200	500	450	343	298.5	28.5	8-Φ22.2
10"	250	605	550	406	362	30.5	12-Φ25.4
12"	300	724	645	483	432	32	12-Φ25.4
14"	350	734	700	533	476	35	12-Φ28.5
16"	400	991	790	597	540	36.5	16-Φ28.5

Water Flow Indicator with Retard (ZSJZYS)

ZSJZYS

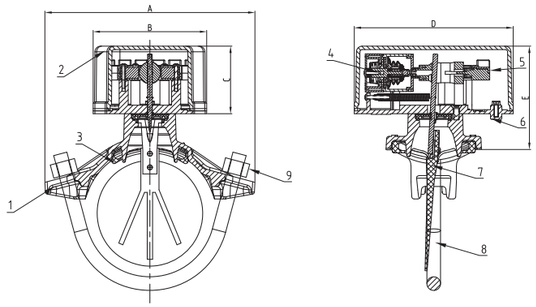

- Connection Ends: AWWA C606
- Working Pressure: 363PSI and 300PSI
  200PSI and 250PSI available upon request
- Temperature Range: 0℃ - 68℃
- Coating: Fusion Bonded Epoxy Coating in accordance with ANSI/AWWA C550
- Electical Ratings: 125/250VAC 5A 24/30VDC 3A
- Minimum Flow Rate For Alarm: 4-10 gpm

MATERIAL SPECIFICATION

Part No.	Part	Standard Specification	Options
1	Body	ASTM A536,65-45-12	
2	Cover	Aluminum Alloy	
3	Gasket	EPDM	NBR
4	Delay Device	Plastic	
5	Signal Connection	N/A	
6	Connection Plate	Aluminum Alloy	
7	Vane	Plastic	
8	U-Bolts	Carbon Steel Zinc Plated	AISI 304, AISI 316
9	Nuts	Carbon Steel Zinc Plated	AISI 304, AISI 316

Note: For special material request other than standard specification, please indicate clearly on the inquiry or order list.

WIRING DIAGRAM

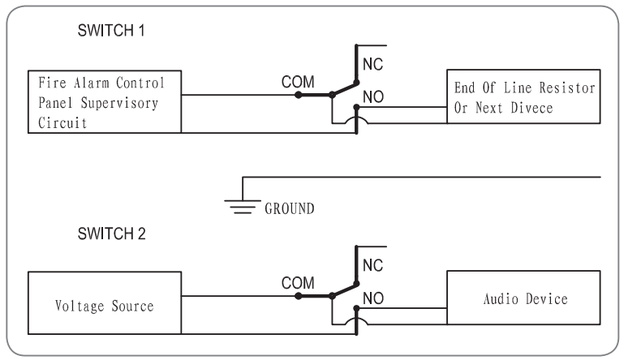

DN		Dimensions(mm)						
Inch	mm	R	A	B	C	D	E	Hole Dia.
2"	50	60.3	116	100	59.5	140	79.5	29
2.5"	65	73	120	100	59.5	140	79.5	29
2.5"	65	76.1	120	100	59.5	140	79.5	29
3"	80	88.9	145	100	59.5	140	80.9	51
4"	100	114.3	185	100	59.5	140	98.5	51
5"	125	139.7	212	100	59.5	140	82.6	51
5"	125	141.3	212	100	59.5	140	82.6	51
6"	150	165.1	254	100	59.5	140	90.4	51
6"	150	168.3	254	100	59.5	140	90.4	51
8"	200	219.1	298	100	59.5	140	90.5	51
10"	250	273.0	381	100	59.5	140	100.5	70

Note: Size 10" is not UL listed.

Water Flow Indicator (ZSJZ)

ZSJZ

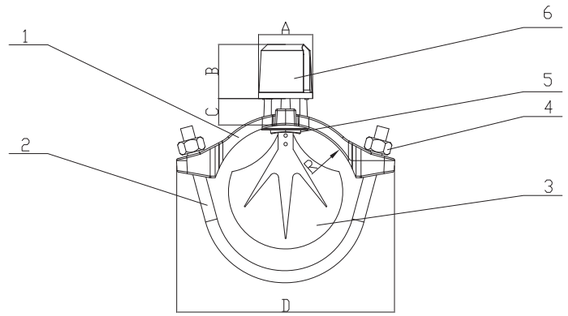

- Connection Ends: AWWA C606
- Working Pressure: 300PSI
  200PSI and 250PSI available upon request
- Temperature Range: 0℃ - 68℃
- Coating: Fusion Bonded Epoxy Coating in accordance with ANSI/AWWA C550

MATERIAL SPECIFICATION

Part No.	Part	Standard Specification	Options
1	Body	ASTM A536, 65-45-12	
2	Bolt	Carbon Steel Zinc Plated	AISI 304, AISI 316
3	Lodicule	Plastic	
4	Nut	Carbon Steel Zinc Plated	AISI 304, AISI 316
5	Gasket	EPDM	NBR

Note: For special material request other than standard specification, please indicate clearly on the inquiry or order list.

SWITCH WIRING DIAGRAM

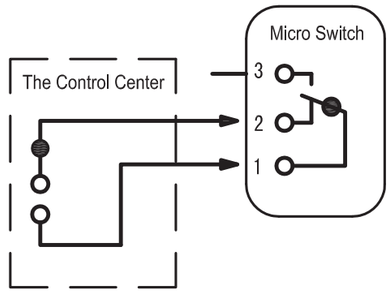

DN		Dimensions(mm)					
Inch	mm	R	A	B	C	D	Hole Dia.
2"	50	60.3	62	48	36	120	32
2.5"	65	73	62	48	31	130	32
3"	80	88.9	62	48	36.5	145	51
4"	100	114.3	62	48	30.5	185	51
5"	125	141.3	62	48	36.5	221.5	51
6"	150	168.3	62	48	33	254	51
8"	200	219.1	62	48	36.5	300	51

Pressure Switch (YLKG)

YLKG

- Service Environment: Indoor or Outdoor Use, all parts have corrosion resistant finishes
- Temperature Range: -10℃ - 80℃ (14° F - 176° F)
- Cover Tamper: Tamper Resistant Screws
  Optional Cover Tamper Switch Available
- Connection: 1/2-14NPT Thread
- Electrical Ratings: 125/250VAC 15A

Different pressure springs are selected according to the difference between the power range of the Pressure Switch (0-20 psi, 0-60 psi, 0-120 psi).

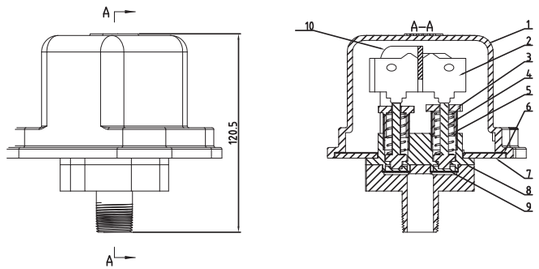

MATERIAL SPECIFICATION

Part No.	Part	Standard Specification	Options
1	Outer Shell	ADC12	
2	Micro Switch		
3	Regulating Accessories	PA66+GF30	
4	Stem	PA66+GF30	
5	Compression Spring	65#	
6	Sealing Washer	PA66+GF30	
7	Back Shell	ADC12	
8	Pressure parts	PA66+GF30	
9	Pressure Diaphragm	EPDM	
10	Micro Stents	Carbon Steel Q235	AISI 304

Note: For special material request other than standard specification, please indicate clearly on the inquiry or order list.

TYPICAL ELECTRICAL CONNECTIONS

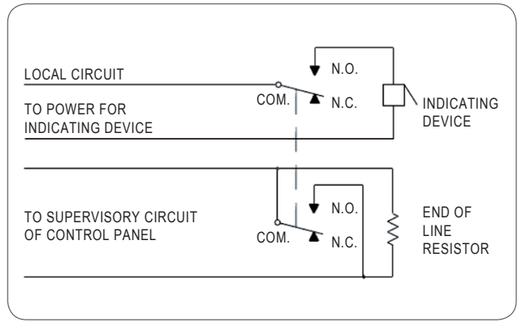

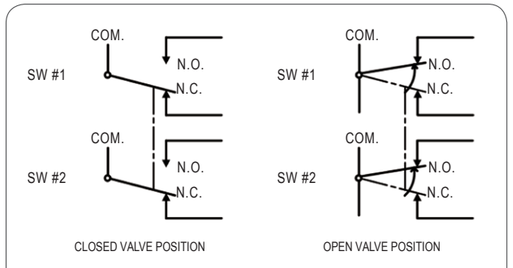

Contact Ratings: 15 Amps at 125/250VAC

AWWA C502 Dry Barrel Fire Hydrant (SSF)

SSF

- Design Standard: AWWA C502-2014
- Bottom Flange Standard: ASME B16.1
- Working pressure: 300PSI
  200PSI and 250PSI available upon request
- Temperature Range: 0℃-100℃

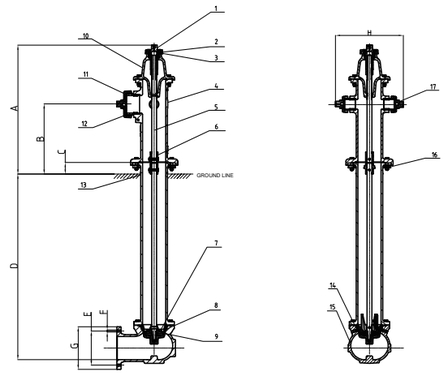

MATERIAL SPECIFICATION

Part No.	Part	Standard Specification	QTY
1	Operating Stem Nut	C95400	1
2	Dirt Shield	ASTM A536,65-45-12	1
3	Stem Lock Nut	C83600	1
4	Upper Barrel	ASTM A536,65-45-12	1
5	Upper Stem	ASTM 1045	1
6	Stem Breaking Coupling	ASTM A126 CLASS B	1
7	Drain Valve	C83600	1
8	Seat Ring	C83600	1
9	Main Valve	ASTM A283GRC+EPDM	1
10	Hydrant Cap	ASTM A536,65-45-12	1
11	Nozzle Cap	ASTM A536,65-45-12	1
12	Nozzle	C83600	1
13	Lower Barrd	ASTM A536,65-45-12	1
14	Bottom Plate	ASTM A536,65-45-12	1
15	Elbow	ASTM A536,65-45-12	1
16	Breaking Ring	ASTM A126 CLASS B	2
17	Nozzle Cap	ASTM A536,65-45-12	2

Note: For special material request other than standard specification, please indicate clearly on the inquiry or order list.

DN	Dimensions(mm)						
Inch	A	B	C	D	E	F	G
41/2"	847	461	76	1219	241.3	8-Φ22.2	Φ280

AWWA C503 Wet-Barrel Fire Hydrant (SSZ)

SSZ

- Design Standard: AWWA C503-2014
- Working Pressure: 300PSI
- Temperature Range: 0℃ - 80℃
- Coating: Fusion Bonded Epoxy Coating in accordance with ANSI/AWWA C550

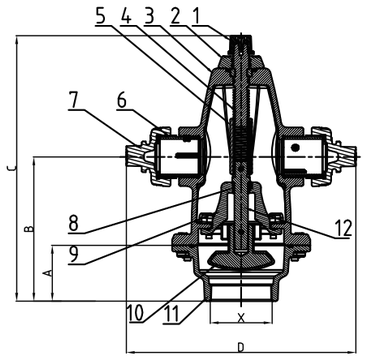

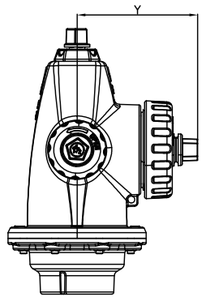

MATERIAL SPECIFICATION

Part No.	Part	Standard Specification	Options
1	Stem Cap	ASTM A536, 65-45-12	
2	Gland	ASTM A536, 65-45-12	
3	Body	ASTM A536, 65-45-12	
4	Upper Stem	AISI 420	AISI 431
5	Stem Nut	C95400	
6	Nozzle	C83600	
7	Nozzle Cap	ASTM A536, 65-45-12	
8	Stem Ferrule	C83600	
9	Seat	ASTM A536, 65-45-12	
10	Clapper	ASTM A536, 65-45-12 + EPDM	ASTM A536, 65-45-12 + NBR
11	Lower Body	ASTM A536, 65-45-12	
12	Lower Stem	AISI 420	AISI 431

Note: For special material request other than standard specification, please indicate clearly on the inquiry or order list.

DN		Dimensions(mm)					
Inch	mm	A	B	C	D	X	Y
4"	100	101	261.1	480.2	415.5	4-8NPT	220

Indoor Fire Hydrant (SN)

SN

- Thread: ASME B1.20.1
- Working Pressure: 300PSI
  200PSI and 250PSI available upon request
- Temperature Range: 0℃ - 100℃
- Coating: Fusion Bonded Epoxy Coating in accordance with ANSI/AWWA C550

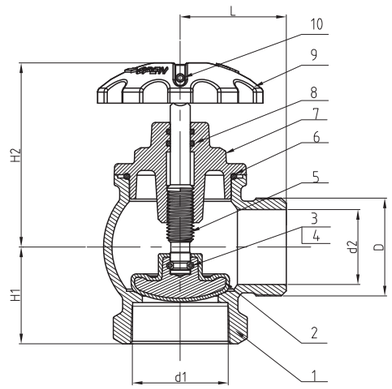

MATERIAL SPECIFICATION

Part No.	Part	Standard Specification
1	Body	ASTM A536, 65-45-12
2	Disc	ASTM A536, 65-45-12
3	Steel Ball	AISI 304
4	Inner Hex Screw	AISI 304
5	Stem	AISI 420
6	O-Ring	NBR
7	Bonnet	ASTM A536, 65-45-12
8	O-Ring	NBR
9	Handwheel	ABS
10	Screw	AISI 304

Note: For special material request other than standard specification, please indicate clearly on the inquiry or order list.

DN		Dimensions(mm)					
Inch	mm	H1	H2	L	d1(Rc)	d2	D(R)
2"	50	57.5	109.5	63	2	44.5	2
2.5"	65	71	109.3	71	$2^{1/2}$	58	$2^{1/2}$

Dry Riser Landing Valve

XZ45W

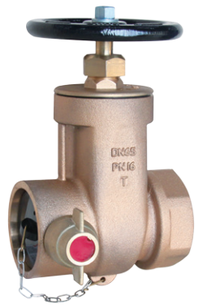

XZ15W

XZ25W

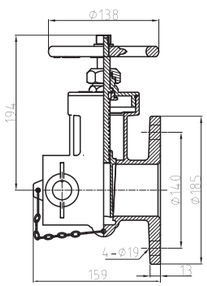

XZ45W

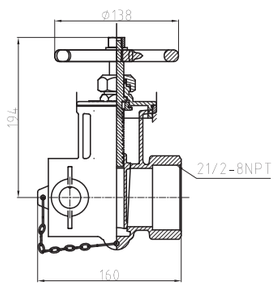

XZ15W

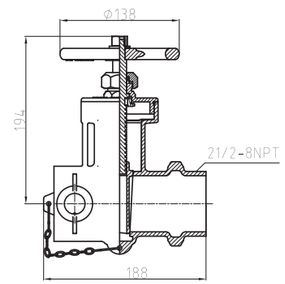

XZ25W

Description

- Dry Riser Gate Valve Flanged (XZ45W), 2.5″
  Dry Riser Gate Valve Threaded (XZ15W / XZ25W), 2.5″
- Working Pressure: 250PSI

MATERIAL SPECIFICATION

Part No.	Part	Standard Specification
1	Lock	HPb59-1
2	Disc	HPb59-1
3	Valve Body	Gunmetal
4	Bonnet	HPb59-1
5	Stem	HPb59-1
6	Handwheel	ASTM A536 65-45-12

Features

- Compact design with excellent flow characteristics
- High quality casting finishes
- Precise machining for metal to metal leak proof seating
- Corrosion resistant
- Maintenance free
- Leather strap and padlock available

Electric Inspector's Test Connection (ZSPM-80-DX)

ZSPM-80-DX

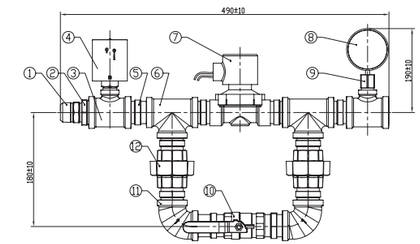

MATERIAL SPECIFICATION

Part No.	Part	Standard Specification
1	Test Nozzle	AISI 304
2	Outside Hex Bushing	Malleable Iron Galvanized
3	Reducing Tee	Malleable Iron Galvanized
4	Pressure Switch	
5	Nexagon Nipple,Equal	Malleable Iron Galvanized
6	Reducing Tee	Malleable Iron Galvanized
7	Solenoid Valves	Brass
8	Pressure Gauge	
9	Connector	Brass
10	Ball Valve	AISI 304
11	90° Elbow	Malleable Iron Galvanized
12	Union With Brass Seat	Malleable Iron Galvanized

Note: 1.For special material request other than standard specification, please indicate clearly on the inquiry or oder list.
2.Threads connection options available includes: ASME B1.20.1, ISO 7-1

Manual Inspector's Test Connection (ZSPM-80-SA)

ZSPM-80-SA

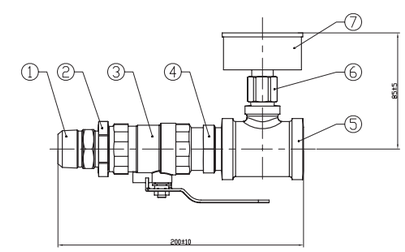

MATERIAL SPECIFICATION

Part No.	Part	Standard Specification
1	Test Nozzle	AISI 304
2	Outside Hex Bushing	Malleable Iron Galvanized
3	Ball Valve	AISI 304
4	Nexagon Nipple,Equal	Malleable Iron Galvanized
5	Reducing Tee	Malleable Iron Galvanized
6	Connector	Brass
7	Pressure Gauge	

Note: 1.For special material request other than standard specification, please indicate clearly on the inquiry or oder list.
2.Threads connection options available includes: ASME B1.20.1, ISO 7-1

Roll Groove Dimensions

Roll Grooving Machine

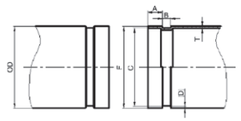

Nominal Size mm/in	Pipe OD Basic mm/in	Pipe OD Tolerence mm/in		Gasket seat A ±0.76/±0.03 mm/in	Groove Width B ±0.76/±0.03 mm/in	Groove Dia C Basic mm/in	Groove Dia C Tolerence mm/in	Groove Depth D(ref) mm/in	Max Allow Flare Dia F mm/in	Min. Allow wall thickness T mm/in
25 1	33.7 1.327	+0.41 +0.016	-0.68 -0.026	15.88 0.625	7.14 0.281	30.23 1.190	-0.38 -0.015	1.60 0.063	34.5 1.358	1.8 0.071
32 1¼	42.4 1.669	+0.50 +0.020	-0.60 -0.023	15.88 0.625	7.14 0.281	38.99 1.535	-0.38 -0.015	1.60 0.063	43.3 1.705	1.8 0.071
40 1½	48.3 1.900	+0.44 +0.017	-0.52 -0.020	15.88 0.625	7.14 0.281	45.09 1.779	-0.38 -0.015	1.60 0.063	49.4 1.945	1.8 0.071
50 2	60.3 2.375	+0.61 +0.024	-0.61 -0.024	15.88 0.625	8.74 0.344	57.15 2.250	-0.38 -0.015	1.60 0.063	62.2 2.449	1.8 0.071
65 2½	73.0 2.875	+0.74 +0.029	-0.74 -0.029	15.88 0.625	8.74 0.344	69.09 2.720	-0.46 -0.018	1.98 0.078	75.2 2.961	2.3 0.091
65 2½	76.1 3.000	+0.76 +0.030	-0.76 -0.030	15.88 0.625	8.74 0.344	72.26 2.845	-0.46 -0.018	1.99 0.078	77.7 3.059	2.3 0.091
80 3	88.9 3.500	+0.89 +0.035	-0.79 -0.031	15.88 0.625	8.74 0.344	84.94 3.344	-0.46 -0.018	1.98 0.078	90.6 3.567	2.3 0.091
100 4	108.0 4.250	+1.07 +0.042	-0.79 -0.031	15.88 0.625	8.74 0.344	103.73 4.084	-0.51 -0.020	2.11 0.083	109.7 4.319	2.3 0.091
100 4	114.3 4.500	+1.14 +0.045	-0.79 -0.031	15.88 0.625	8.74 0.344	110.08 4.334	-0.51 -0.020	2.11 0.083	116.2 4.575	2.3 0.091
125 5	133.0 5.250	+1.32 +0.052	-0.79 -0.031	15.88 0.625	8.74 0.344	129.13 5.084	-0.51 -0.020	2.11 0.083	134.9 5.311	2.9 0.114
125 5	139.7 5.500	+1.40 +0.055	-0.79 -0.031	15.88 0.625	8.74 0.344	135.48 5.334	-0.51 -0.020	2.11 0.083	141.7 5.579	2.9 0.114
125 5	141.3 5.563	+1.42 +0.056	-0.79 -0.031	15.88 0.625	8.74 0.344	137.03 5.395	-0.56 -0.022	2.13 0.084	143.5 5.650	2.9 0.114
150 6	159.0 6.250	+1.60 +0.063	-0.79 -0.031	15.88 0.625	8.74 0.344	154.50 6.083	-0.56 -0.022	2.16 0.085	161.0 6.339	2.9 0.114
150 6	165.1 6.500	+1.60 +0.063	-0.79 -0.031	15.88 0.625	8.74 0.344	160.8 6.330	-0.56 -0.022	2.16 0.085	167.1 6.579	2.9 0.114
150 6	168.3 6.625	+1.60 +0.063	-0.79 -0.031	15.88 0.625	8.74 0.344	163.96 6.455	-0.56 -0.022	2.16 0.085	170.7 6.720	2.9 0.114
200A 8	216.3 8.516	+1.60 +0.063	-0.79 -0.031	19.05 0.750	11.91 0.469	211.60 8.331	-0.64 -0.025	2.35 0.093	219.8 8.653	2.9 0.114
200 8	219.1 8.625	+1.60 +0.063	-0.79 -0.031	19.05 0.750	11.91 0.469	214.40 8.441	-0.64 -0.025	2.34 0.092	221.5 8.720	2.9 0.114
250A 10	267.4 10.528	+1.60 +0.063	-0.79 -0.031	19.05 0.750	11.91 0.469	262.60 10.339	-0.69 -0.027	2.40 0.095	270.9 10.665	3.6 0.142
250 10	273.0 10.750	+1.60 +0.063	-0.79 -0.031	19.05 0.750	11.91 0.469	268.28 10.562	-0.69 -0.027	2.39 0.094	275.4 10.842	3.6 0.142
300A 12	318.5 12.539	+1.60 +0.063	-0.79 -0.031	19.05 0.750	11.91 0.469	312.90 12.319	-0.76 -0.030	2.77 0.109	322.0 12.677	4.0 0.158
300 12	323.9 12.750	+1.60 +0.063	-0.79 -0.031	19.05 0.750	11.91 0.469	318.29 12.531	-0.76 -0.030	2.77 0.109	326.2 12.842	4.0 0.158
350 14	377.0 14.842	+1.60 +0.063	-0.79 -0.031	23.83 0.938	11.91 0.469	371.44 14.623	-0.76 -0.030	2.77 0.109	379.5 14.941	4.5 0.177
400 16	426.0 16.772	+1.60 +0.063	-0.79 -0.031	23.83 0.938	11.91 0.469	420.46 16.553	-0.76 -0.030	2.77 0.109	428.5 16.870	4.5 0.177
500 20	529.0 20.827	+1.60 +0.063	-0.79 -0.031	25.40 1.000	11.91 0.469	523.46 20.608	-0.76 -0.030	2.77 0.109	533.0 20.984	5.0 0.197

Class 125 Flange and Bolting Dimensions

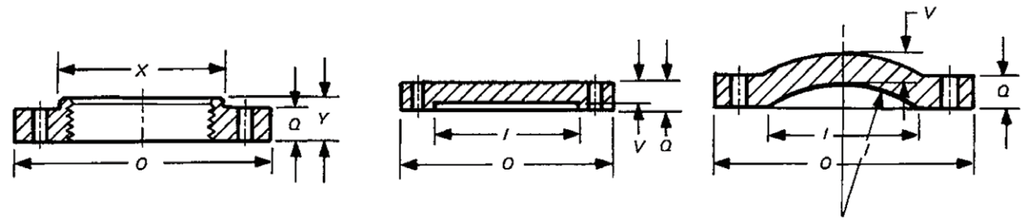

NPS	Flanges Diameter of Flange, O	Flanges Thickness of Flange, Min., Q [Note(1)]	Hub Diameter Min., X	Hub Length of Hub and Threads, Min., Y [Note(2)]	Blind Flanges Diameter of Port, I [Note(3)]	Blind Flanges Wall thickness, V [Note(4)]	Bolt Holes Diameter of Bolt Circle	Bolt Holes Diameter of Bolt Holes [Notes(5) and(6)]	Bolting Number of Bolts	Bolting Diameter of Bolts [Notes(7) anf(8)]	Bolting Length of Bolts [Notes(7) and(8)]	Bolting Length of Bolt Stud With Two Nuts [Note(7)]
1	110	11.1	49	18	25	9.6	79	5/8	4	1/2	45	…
11/4	115	12.7	59	21	32	11.1	89	5/8	4	1/2	51	…
11/2	125	14.3	65	22	38	12.7	98	5/8	4	1/2	51	…
2	150	15.9	78	25	51	14.3	121	3/4	4	5/8	57	…
21/2	180	17.5	91	29	64	15.9	140	3/4	4	5/8	64	…
3	190	19.0	108	30	76	17.5	152	3/4	4	5/8	64	…
31/2	215	20.6	122	32	89	19.0	178	3/4	8	5/8	70	…
4	230	23.8	135	33	102	22.2	191	3/4	8	5/8	76	…
5	255	23.8	164	37	127	22.2	216	7/8	8	3/4	76	…
6	280	25.4	192	40	152	23.8	241	7/8	8	3/4	83	…
8	345	28.6	246	45	203	27.0	299	7/8	8	3/4	89	…
10	405	30.2	303	49	254	28.6	362	1	12	7/8	95	…
12	485	31.8	357	56	305	20.6	432	1	12	7/8	95	…
14	535	32.4	391	57	356	22.2	476	1 1/8	12	1	108	…
16	595	36.5	445	64	406	25.4	540	1 1/8	16	1	114	…
18	635	39.7	499	68	457	27.0	578	1 1/4	16	1 1/8	121	…
20	700	42.9	553	73	508	28.6	635	1 1/4	20	1 1/8	127	…
24	815	47.6	660	83	610	31.8	749	1 3/8	20	1 1/4	140	…
30	985	54.0	…	…	762	36.6	914	1 3/8	28	1 1/4	159	…
36	1170	60.3	…	…	914	41.3	1086	1 5/8	32	1 1/2	178	222
42	1345	66.7	…	…	1066	46.0	1257	1 5/8	36	1 1/2	191	235
48	1510	69.9	…	…	1219	50.8	1422	1 5/8	44	1 1/2	197	242
54(9)	1685	76.2	…	…	…	…	1594	2	44	1 3/8	216	267
60(9)	1855	79.4	…	…	…	…	1759	2	52	1 3/8	222	273
72(9)	2195	88.9	…	…	…	…	2096	2	60	1 3/8	241	292
84(9)	2535	98.4	…	…	…	…	2426	2 1/4	64	2	267	324
96(9)	2875	108.0	…	…	…	…	2756	2 1/2	68	2 1/4	292	356

General Note: Dimensions are in millimeters.

Notes:

(1) For facing see para.7.2.(a)

(2) For thread of threaded flanges, see paras.7.5.1 and 7.5.2.

(3) All blind flange NPS 12 and larger must be dished with inside radius equal to the port diameter.

(4) For wall thickness tolerance, see para.7.1.

(5) For flange bolt holes, see para.7.6.

(6) For spot facing, see para.7.7.

(7) For bolts and nuts, see para.8.1.1.

(8) Bolt lengths to be compensated for when bolting steel to gray iron flanges.

(9) NPS 54 through 96 are included for convenience. Pressure-temperature ratings are the user's responsibility.